Panasonic

Feature Manual

Pure IP-PBX

Model No. KX-NCP500/KX-NCP1000
KX-TDE100/KX-TDE200/KX-TDE600

Thank you for purchasing a Panasonic Pure IP-PBX.
Please read this manual carefully before using this product and save this manual for future use.

KX-NCP500/KX-NCP1000: PBMPR Software File Version 7.0000 or later
KX-TDE100/KX-TDE200: PMMPR Software File Version 7.0000 or later
KX-TDE600: PGMPR Software File Version 7.0000 or later

Document Version: 2013-05

Introduction

About the Feature Manual

The Feature Manual is designed to serve as an overall reference describing the features of the Panasonic Pure IP-PBX. It explains what the PBX can do, as well as how to obtain the most of its many features and facilities.
The Feature Manual is divided into the following sections:

Sections 1 to 20, Features and Configurations

Describes the call handling, system configuration and administration features of the PBX.

Section 21, Appendix

Provides tables listing capacity of system resources, exclusive features for each PBX model, tone and ring tone tables, and the revision history of this Feature Manual.

Index

An alphabetical listing of features and terms, as well as the page numbers of related sections.

References Found in the Feature Manual

Installation Manual References

The PBX Installation Manual provides instructions detailing the installation and maintenance of the PBX. Sections from the Installation Manual are listed throughout the Feature Manual for your reference.

PC Programming Manual References

Commonly used settings can be programmed using the Maintenance Console (→ 13.1.6 PC Programming). These PC programming items are noted throughout the Feature Manual for your reference by title and System Menu number.

PT Programming Manual References

Commonly used settings can be programmed using a display PT (→ 13.1.32 PT Programming). These PT programming items are noted throughout the Feature Manual for your reference by title and program number.

Feature Manual References

Related sections of the Feature Manual are listed for your reference.

Operating Manual References

The Operating Manual describes how users can access commonly used PBX features and functions with their proprietary telephones (PTs), single line telephones (SLTs), portable stations (PSs), and DSS Consoles. Sections from the Operating Manual are listed throughout the Feature Manual for your reference.

Links to Other Pages and Manuals

If viewing this Feature Manual with a PC, certain items are linked to different sections of the Feature Manual and other manuals. Click on a link to jump to that section.
Linked items include:

- Installation Manual References
- Feature Manual References
- Operating Manual References
- PT Programming References
- PC Programming References

Abbreviations

There are many abbreviations used in this manual (e.g., "PT", for proprietary telephone). Please refer to the list in the next section for the meaning of each abbreviation.

Note

- The contents of this manual apply to PBXs with a certain software version, as indicated on the cover of this manual. To confirm the software version of your PBX, see 2.7.1 Frequently Asked Questions (FAQ) in the FAQ of the PC Programming Manual, or [190] Main Processing (MPR) Software Version Reference in the PT Programming Manual.
- Some optional hardware, software, and features are not available in some areas, or for some PBX models. Please consult your certified Panasonic dealer for more information.
- Product specifications are subject to change without notice. In some cases, additional information, including updates to this and other manuals, is included in the Maintenance Console's **Information before programming**. Install the latest version of Maintenance Console to view this information.
- All system programming can be performed through PC programming (→ 13.1.6 PC Programming). However, only a subset can be performed through PT programming (→ 13.1.32 PT Programming). Throughout this manual, programming references are included as follows:
  PC Programming
  The number within the brackets indicates the System Menu number for the Maintenance Console.
  → 8.1 [6-1] System Speed Dial—◆ CO Line Access Number + Telephone Number
  PT Programming
  The number within the brackets indicates the programming number that is entered when performing PT programming.
  → [001] System Speed Dialing Number
  For further details, please refer to the PC Programming Manual and PT Programming Manual.
- In this manual, KX-NT500 series mean KX-NT543, KX-NT546 and KX-NT560.

Safety Notices

Please observe the safety notices in this manual in order to avoid danger to users or other people, and prevent damage to property.
The notices are classified as follows, according to the severity of injury or damage:

⚠ **WARNING**	This notice means that misuse could result in death or serious injury.
⚠ **CAUTION**	This notice means that misuse could result in injury or damage to property.

WARNING

Unplug the PBX from the AC outlet if it emits smoke, an abnormal smell or makes unusual noise. These conditions can cause fire or electric shock. Confirm that smoke has stopped and contact an authorized Panasonic Factory Service Center.

Other Information

Trademarks

- Microsoft and Outlook are either registered trademarks or trademarks of Microsoft Corporation in the United States and/or other countries.
- The Bluetooth® word mark and logos are owned by the Bluetooth SIG, Inc. and any use of such marks by Panasonic Corporation is under license.

- All other trademarks identified herein are the property of their respective owners.

List of Abbreviations

A

AA
Automated Attendant

ACD
Automatic Call Distribution

ANI
Automatic Number Identification

APT
Analog Proprietary Telephone

ARS
Automatic Route Selection

B

BGM
Background Music

C

CA
Communication Assistant

CCBS
Completion of Calls to Busy Subscriber

CDPG
Call Distribution Port Group

CF
Call Forwarding—QSIG

CLI
Calling Line Identification

CLIP
Calling Line Identification Presentation

CLIR
Calling Line Identification Restriction

CNIP
Calling Name Identification Presentation

CNIR
Calling Name Identification Restriction

COLP
Connected Line Identification Presentation

COLR
Connected Line Identification Restriction

CONP
Connected Name Identification Presentation

CONR
Connected Name Identification Restriction

COS
Class of Service

CPC
Calling Party Control

CS
Cell Station

CT
Call Transfer—QSIG

CTI
Computer Telephony Integration

D

DHCP
Dynamic Host Configuration Protocol

DID
Direct Inward Dialing

DIL
Direct In Line

DISA
Direct Inward System Access

DND
Do Not Disturb

DPT
Digital Proprietary Telephone

DSS
Direct Station Selection

DTMF
Dual Tone Multi-Frequency

E

EFA
External Feature Access

F

FWD
Call Forwarding

G

G-CO
Group-CO

I

ICD
Incoming Call Distribution

ICMP
Internet Control Message Protocol

IP-PT
IP Proprietary Telephone

IRNA
Intercept Routing—No Answer

ISDN
Integrated Services Digital Network

L

L-CO
Loop-CO

LCS
Live Call Screening

LED
Light Emitting Diode

N

NDSS
Network Direct Station Selection

O

OGM
Outgoing Message

OHCA
Off-hook Call Announcement

OPX
Off Premise Extension

P

PDN
Primary Directory Number

PIN
Personal Identification Number

PING
Packet Internet Grouper

PRI
Primary Rate Interface

PS
Portable Station

PT
Proprietary Telephone

S

S-CO
Single-CO

SDN
Secondary Directory Number

SIP
Session Initiation Protocol

SLT
Single Line Telephone

SMDR
Station Message Detail Recording

SNMP
Simple Network Management Protocol

SNTP
Simple Network Time Protocol

SVM
Simplified Voice Message

T

TAFAS
Trunk Answer from Any Station

TEI
Terminal Endpoint Identifier

TRG
Trunk Group

TRS
Toll Restriction

U

UCD
Uniform Call Distribution

V

VM
Voice Mail

VoIP
Voice over Internet Protocol

VPS
Voice Processing System

X

XDP
EXtra Device Port

Table of Contents

1 Features and Configurations—A 13

1.1 A 14

1.1.1 Absent Message 14
1.1.2 Account Code Entry 15
1.1.3 ARS (Automatic Route Selection) 16
1.1.4 Automatic Callback Busy (Camp-on) 22
1.1.5 Automatic Extension Release 23
1.1.6 Automatic Fax Transfer 23
1.1.7 Automatic Time Adjustment 25

2 Features and Configurations—B 27

2.1 B 28

2.1.1 BGM (Background Music) 28

3 Features and Configurations—C 31

3.1 C 32

3.1.1 CA (Communication Assistant) 32
3.1.2 Call Distribution Port Group 33
3.1.3 Caller ID 34
3.1.4 Caller Information before Executive Busy Override or Call Monitor 40
3.1.5 Call Hold 40
3.1.6 Call Log, Incoming 43
3.1.7 Call Monitor 46
3.1.8 Call Park 47
3.1.9 Call Pickup 48
3.1.10 Call Splitting 51
3.1.11 Call Transfer 51
3.1.12 CALL WAITING FEATURES 54
3.1.13 Call Waiting Tone 56
3.1.14 CELLULAR PHONE FEATURES 57
3.1.15 CLI (Calling Line Identification) Distribution 58
3.1.16 CLIP (Calling Line Identification Presentation) 59
3.1.17 CO Line Access 61
3.1.18 CO Line Call Limitation 63
3.1.19 Conference 65
3.1.20 Conference Group Call 66
3.1.21 Confirmation Tone 70
3.1.22 Consultation Hold 71
3.1.23 COS (Class of Service) 71
3.1.24 CPC (Calling Party Control) Signal Detection 72
3.1.25 CTI (Computer Telephony Integration) 73

4 Features and Configurations—D 75

4.1 D 76

4.1.1 Data Line Security 76
4.1.2 DHCP (Dynamic Host Configuration Protocol) Assignment 76
4.1.3 Dial Mode Selection 77
4.1.4 Dial Tone 77
4.1.5 Dial Tone Transfer 79
4.1.6 DID (Direct Inward Dialing) 80
4.1.7 DIL (Direct In Line) 82
4.1.8 DISA (Direct Inward System Access) 84

4.1.9 Display Information 95
4.1.10 DND (Do Not Disturb) 96
4.1.11 Door Open 97
4.1.12 Doorphone Call 98

5 Features and Configurations—E 101

5.1 E 102
5.1.1 EFA (External Feature Access) 102
5.1.2 Emergency Call 103
5.1.3 Executive Busy Override 103
5.1.4 Extension Dial Lock 104
5.1.5 Extension Feature Clear 105
5.1.6 Extension PIN (Personal Identification Number) 106
5.1.7 Extension Port Configuration 108
5.1.8 External Relay 109
5.1.9 External Sensor 110

6 Features and Configurations—F 113

6.1 F 114
6.1.1 Fixed Buttons 114
6.1.2 Flash/Recall/Terminate 116
6.1.3 Flexible Buttons 117
6.1.4 Flexible Numbering/Fixed Numbering 120
6.1.5 Floating Extension 126
6.1.6 FWD (Call Forwarding) 127
6.1.7 FWD/DND Button, Group FWD Button 131

7 Features and Configurations—G 135

7.1 G 136
7.1.1 GROUP FEATURES 136

8 Features and Configurations—H 141

8.1 H 142
8.1.1 Hands-free Answerback 142
8.1.2 Hands-free Operation 143
8.1.3 Headset Operation 143
8.1.4 HOSPITALITY FEATURES 145
8.1.5 Host PBX Access Code (Access Code to the Telephone Company from a Host PBX) 145
8.1.6 Hot Line 147

9 Features and Configurations—I 149

9.1 I 150
9.1.1 ICD GROUP FEATURES 150
9.1.2 ICD Group Features—Group Call Distribution 153
9.1.3 ICD Group Features—Log-in/Log-out 156
9.1.4 ICD Group Features—Outside Destinations 159
9.1.5 ICD Group Features—Overflow 161
9.1.6 ICD Group Features—Queuing 163
9.1.7 ICD Group Features—Supervisory 166
9.1.8 ICD Group Features—VIP Call 167
9.1.9 Idle Extension Hunting 168
9.1.10 INCOMING CALL FEATURES 170
9.1.11 Intercept Routing 173
9.1.12 Intercept Routing—No Destination 177

9.1.13 Intercom Call 178
9.1.14 Internal Call Block 179
9.1.15 IP-PT (IP Proprietary Telephone) 181
9.1.16 ISDN (INTEGRATED SERVICES DIGITAL NETWORK) FEATURES 182

10 Features and Configurations—L 185

10.1 L 186
10.1.1 LED Indication 186
10.1.2 Line Preference—Incoming 188
10.1.3 Line Preference—Outgoing 189
10.1.4 Local Alarm Information 190

11 Features and Configurations—M 193

11.1 M 194
11.1.1 Manager Features 194
11.1.2 MEMORY DIALING FEATURES 195
11.1.3 Message Waiting 197
11.1.4 Music on Hold 201
11.1.5 Mute 203

12 Features and Configurations—O 205

12.1 O 206
12.1.1 Off-hook Monitor 206
12.1.2 OGM (Outgoing Message) 206
12.1.3 OHCA (Off-hook Call Announcement) 209
12.1.4 One-touch Dialing 210
12.1.5 Operator Features 210

13 Features and Configurations—P 213

13.1 P 214
13.1.1 Paging 214
13.1.2 Paralleled Telephone 216
13.1.3 Password Security 219
13.1.4 Pause Insertion 220
13.1.5 PC Console/PC Phone 221
13.1.6 PC Programming 222
13.1.7 PDN (Primary Directory Number)/SDN (Secondary Directory Number) Extension 225
13.1.8 Peer-to-Peer Connection 230
13.1.9 PING (Packet Internet Groper) Confirmation 231
13.1.10 Power Failure Restart 231
13.1.11 Power Failure Transfer 232
13.1.12 Predialing 233
13.1.13 Printing Message 233
13.1.14 Privacy Release 234
13.1.15 PRIVATE NETWORK FEATURES 235
13.1.16 Private Network Features—Centralized Voice Mail 259
13.1.17 Private Network Features—NDSS (Network Direct Station Selection) 264
13.1.18 Private Network Features—Network ICD Group 269
13.1.19 Private Network Features—PS Roaming by Network ICD Group 271
13.1.20 PRIVATE NETWORK FEATURES—QSIG 272
13.1.21 Private Network Features—QSIG—CCBS (Completion of Calls to Busy Subscriber) 274
13.1.22 Private Network Features—QSIG—CF (Call Forwarding) 275

13.1.23 Private Network Features—QSIG—CLIP/COLP (Calling/Connected Line Identification Presentation) and CNIP/CONP (Calling/Connected Name Identification Presentation) 276
13.1.24 Private Network Features—QSIG—CT (Call Transfer) 278
13.1.25 Private Network Features—QSIG—Enhanced Features 279
13.1.26 Private Network Features—VoIP (Voice over Internet Protocol) 281
13.1.27 PS (Portable Station) 287
13.1.28 PS—CO Status Display (KX-WT125/KX-WT126 only) 289
13.1.29 PS—Directory 289
13.1.30 PS—Feature Buttons 290
13.1.31 PS—Ring Group 290
13.1.32 PT Programming 294

14 Features and Configurations—Q 297

14.1 Q 298
14.1.1 Quick Dialing 298
14.1.2 Quick Setup 298

15 Features and Configurations—R 301

15.1 R 302
15.1.1 Redial, Last Number 302
15.1.2 Ring Tone Pattern Selection 303
15.1.3 Room Status Control 305

16 Features and Configurations—S 307

16.1 S 308
16.1.1 Self Labeling (KX-NT366/KX-NT560) 308
16.1.2 SIP (Session Initiation Protocol) Extension 309
16.1.3 SIP Refer Transfer 310
16.1.4 SMDR (Station Message Detail Recording) 311
16.1.5 SNMP (Simple Network Management Protocol) System Monitor 319
16.1.6 Special Carrier Access Code 321
16.1.7 Speed Dialing, Personal 322
16.1.8 Speed Dialing, System 323
16.1.9 SVM (Simplified Voice Message) 324
16.1.10 Syslog Record Management 330

17 Features and Configurations—T 333

17.1 T 334
17.1.1 T1 Line Service 334
17.1.2 TAFAS (Trunk Answer From Any Station) 335
17.1.3 Tenant Service 336
17.1.4 Timed Reminder 341
17.1.5 Time Service 342
17.1.6 TRS (Toll Restriction) 346

18 Features and Configurations—U 355

18.1 U 356
18.1.1 Upgrading the Software 356

19 Features and Configurations—V 357

19.1 V 358
19.1.1 Verification Code Entry 358
19.1.2 Virtual PS 359
19.1.3 Voice Mail (VM) Group 361

19.1.4 Voice Mail DPT (Digital) Integration 364
19.1.5 Voice Mail DTMF Integration 371

20 Features and Configurations—W 379

20.1 W 380
20.1.1 Walking COS 380
20.1.2 Walking Extension 381
20.1.3 Walking Extension, Enhanced 382
20.1.4 Whisper OHCA 383
20.1.5 Wireless XDP Parallel Mode 384

21 Appendix 389

21.1 Capacity of System Resources 390
21.2 Tones/Ring Tones 395
21.3 Supported Management Information Base (MIB) Table 397
21.4 Revision History 402
21.4.1 KX-NCP500/KX-NCP1000 PBMPR Software File Version 1.01xx 402
21.4.2 KX-NCP500/KX-NCP1000 PBMPR Software File Version 2.02xx 402
21.4.3 KX-NCP500/KX-NCP1000 PBMPR Software File Version 4.1xxx 403
21.4.4 KX-NCP500/KX-NCP1000 PBMPR Software File Version 4.2xxx 404
21.4.5 KX-NCP500/KX-NCP1000 PBMPR Software File Version 5.0xxx 404
21.4.6 KX-NCP500/KX-NCP1000 PBMPR Software File Version 6.0xxx 405
21.4.7 KX-NCP500/KX-NCP1000 PBMPR Software File Version 7.xxxx 405
21.4.8 KX-TDE100/KX-TDE200 PMMPR Software File Version 2.0xxx 406
21.4.9 KX-TDE100/KX-TDE200 PMMPR Software File Version 2.01xx 406
21.4.10 KX-TDE100/KX-TDE200 PMMPR Software File Version 3.0xxx 407
21.4.11 KX-TDE100/KX-TDE200 PMMPR Software File Version 4.1xxx 408
21.4.12 KX-TDE100/KX-TDE200 PMMPR Software File Version 4.2xxx 409
21.4.13 KX-TDE100/KX-TDE200 PMMPR Software File Version 5.0xxx 409
21.4.14 KX-TDE100/KX-TDE200 PMMPR Software File Version 6.0xxx 410
21.4.15 KX-TDE100/KX-TDE200 PMMPR Software File Version 7.xxxx 410
21.4.16 KX-TDE600 PGMPR Software File Version 3.0xxx 411
21.4.17 KX-TDE600 PGMPR Software File Version 4.1xxx 412
21.4.18 KX-TDE600 PGMPR Software File Version 4.2xxx 412
21.4.19 KX-TDE600 PGMPR Software File Version 5.0xxx 413
21.4.20 KX-TDE600 PGMPR Software File Version 6.0xxx 414
21.4.21 KX-TDE600 PGMPR Software File Version 7.xxxx 414

Index....415

Section 1

Features and Configurations—A

1.1 A

1.1.1 Absent Message

Description

Extension users can prepare a brief text message (Absent Message) that will be displayed to other extension users when they are called. These messages can explain the reason for their absence, and may be edited through system programming and personal programming.
The following Absent Messages may be programmed:

Type	Message No.	Message (Example)	Description
System message	1	`Will Return Soon`	Messages may be edited through system programming. They can be used by any extension user.
	2	`Gone Home`	
	3	`At Ext %%%%` (Extension Number)	
	4	`Back at %%:%%` (Hour:Minute)	
	5	`Out until %%/%%` (Month/Day)	
	6	`In a Meeting`	
	7		
	8		
Personal message	9		A message is programmable by each extension through personal programming (Personal Absent Message), which can only be used by that extension user.

Note

The "%" shown above indicates a parameter to be entered when assigning a message at an individual extension.
Up to seven "%"s can be stored for each message.

Conditions

- An extension user can select only one Absent Message at a time. The selected message is displayed at the extension while on-hook.
- The caller must use a display proprietary telephone (PT) to see the Absent Message.

PC Programming Manual References

4.9 [2-6-1] Numbering Plan—Main—Features—◆ Absent Message Set / Cancel
6.1 [4-1-1] Wired Extension—Extension Settings—Option 3—◆ Absent Message
6.10 [4-2-1] Portable Station—Extension Settings—Option 3—◆ Absent Message
8.5 [6-5] Absent Message

PT Programming Manual References

[008] Absent Message

Feature Manual References

21.1 Capacity of System Resources

Operating Manual References

1.3.1 Absent Message
3.1.2 Personal Programming

1.1.2 Account Code Entry

Description

An account code is used to identify outgoing CO line calls for accounting and billing purposes. The account code is appended to the Station Message Detail Recording (SMDR) call record. For example, a firm can use an account code for each client to determine which calls were made for which client, and can submit a bill to the client according to the client's account code as shown on the SMDR call record.
There are two methods of entering account codes explained below.
One of the methods is selected for each extension based on Class of Service (COS) programming.

Mode	Description
Option	An extension user can enter an account code, but is not required to.
Forced	An extension user must always enter an account code before seizing a CO line.

Conditions

- An account code can be stored in Memory Dialing (One-touch Dialing, for example).
- **Account Button**
  A flexible button can be customized as the Account button. The Account button is used in place of the feature number for entering an account code. This button is useful because it can be used at any time, while feature number entry is allowed only when hearing a dial tone before seizing a CO line.
- Extension users can enter an account code at any time during a call, including after the call has been disconnected and a reorder tone is heard. However, if an account code is entered after there is no longer a reorder tone, the call will not be stored in the SMDR record.
- If an account code is entered more than once, the code entered last is logged in the SMDR.
- Even in Forced mode, emergency numbers can be dialed without an account code. (→ 5.1.2 Emergency Call)
- Proprietary telephone (PT) users can also enter an account code for incoming CO line calls during a conversation.
- **Verification Code Entry**
  To identify who made a CO line call for accounting and billing purposes, a verification code can be used. This code can be used at any extension. (→ 19.1.1 Verification Code Entry)

PC Programming Manual References

4.9 [2-6-1] Numbering Plan—Main—Features—◆ Account Code Entry
4.12 [2-7-1] Class of Service—COS Settings—CO & SMDR—◆ Account Code Mode

PT Programming Manual References

[508] Account Code Mode

Feature Manual References

3.1.23 COS (Class of Service)
6.1.3 Flexible Buttons
16.1.4 SMDR (Station Message Detail Recording)

Operating Manual References

1.2.1 Making Calls

1.1.3 ARS (Automatic Route Selection)

Description

Different telephone carriers charge different rates for calls placed to different areas. Your PBX may use different telephone carriers to make calls to different areas in an effort to reduce costs.
Automatic Route Selection (ARS) is a feature which automatically selects different carriers each time a CO line call is made. In order to use ARS effectively, various ARS-related tables must be preprogrammed to tell the PBX which calls should be placed using which carriers, during which time of day.
If you do not activate ARS, if ARS is bypassed, or if you do not use multiple carriers, CO line calls will be connected via the carrier contracted for each line (default carrier).

[Carrier Selection Procedure Flowchart]

The numbers in parentheses indicate the corresponding items found under [Programming Procedures] on the following pages.

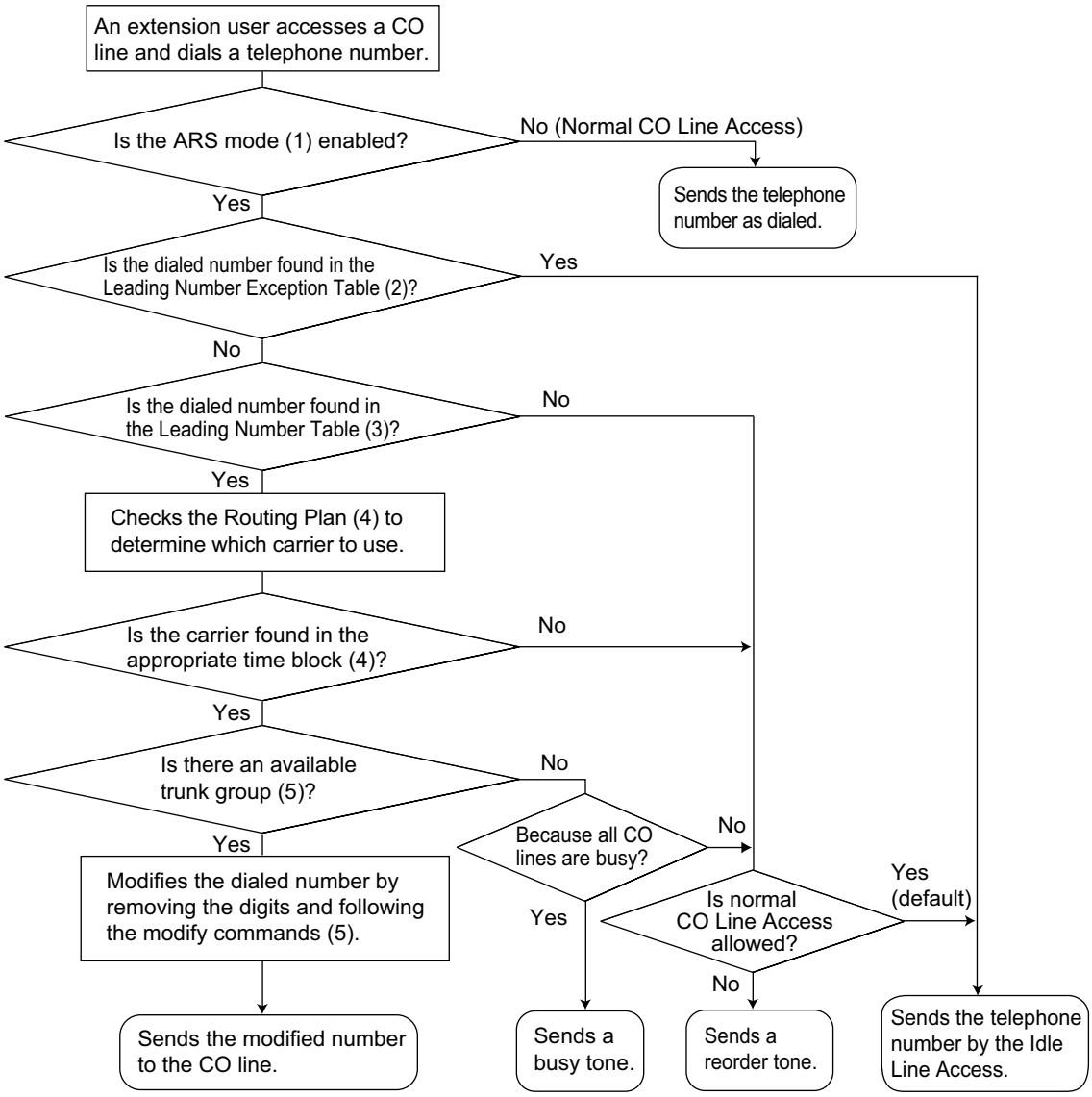

[Programming Procedures]

1. **ARS Mode**
   ARS is turned on by selecting under which circumstances it operates – either when an extension user makes a call using the Idle Line Access method, or when any CO Line Access method is used (→ 3.1.17 CO Line Access). ARS can also be turned off for the entire system.
   → 10.1 [8-1] System Setting—◆ ARS Mode
   → [320] ARS Mode
2. **Leading Number Exception Table**
   Once ARS is activated, store the telephone numbers that will bypass ARS in the Leading Number Exception Table.
   Note that the first few digits (leading number) of a telephone number, such as an area code or local exchange, can also be stored, so that all calls to those areas or exchanges are exempted from ARS. Also

note that the CO Line Access number is always ignored by ARS and does not need to be programmed here.
Calls that are exempt from ARS are connected to the user-selected line, via the default carrier for that line.

[Programming Example: ARS Leading Number Exception Table]

Location No.	Leading No. Exception *1
1	555
2	556
3	567

*1 → 10.7 [8-6] Leading Number Exception
→ [325] ARS Exception Number

In this example:
555, 556, and 567 are local exchanges. (555-XXXX, 556-XXXX, 567-XXXX)
These calls can be made using any carrier, and are therefore exempt from ARS.

3. **Leading Number Table**
Next, store the leading numbers of telephone numbers that should be routed by ARS, and assign a Routing Plan to each leading number that will control how calls containing these leading numbers are routed. When an extension user dials a number which contains a leading number stored in the ARS Leading Number Table, the call will be routed the corresponding Routing Plan assigned here. Note that the CO Line Access number is always ignored by ARS and does not need to be programmed here.
Before programming the details of each Routing Plan (explained below), you can simply assign here the same Routing Plan number to all the different leading numbers which will be routed the same way.
If a dialed number matches two or more leading numbers stored in the ARS Leading Number Table, the lowest numbered location will have priority.

[Programming Example: ARS Leading Number Table]

Location No.	Leading No.*1	Additional No. of Digits*2	Routing Plan No.*3
1	1212	7	1
2	01181	0	5
3	01144	0	12

*1 → 10.2 [8-2] Leading Number—◆ Leading Number
→ [321] ARS Leading Number
*2 → 10.2 [8-2] Leading Number—◆ Additional Number of Digits
*3 → 10.2 [8-2] Leading Number—◆ Routing Plan Number
→ [322] ARS Routing Plan Table Number

Additional Number of Digits
In order for calls to be made using the desired carrier, telephone numbers dialed by extension users must be modified to meet the criteria required by the carrier. (Refer to 5. Carrier Table.) This modification usually involves removing digits and adding access codes to the beginning of the dialed number.
In situations where a preprogrammed number (such as an Itemized Billing Code) must be added automatically after the telephone number that was dialed by the extension user, set the Additional Number of Digits to a value greater than 0.

4. **Routing Plan**

Since the preferred carrier may vary depending on the time of day, you can create an ARS-specific time table and break each day of the week into different time blocks. A different carrier can then be assigned to each time block.

Routing Plan Time Table: For each Routing Plan, a different carrier can be assigned for each time of day and each day of the week. Each day can have up to four programmable time blocks.

Routing Plan Priority: For each Routing Plan, a different carrier can be assigned a different priority for each time of day. Generally, the carrier assigned to priority 1 will be used, however, if the CO lines assigned to this carrier are busy, a different available carrier will be used according to priority level.

ARS Leading Number Table

Location No.	Leading No.	Additional No. of Digits	Routing Plan No.
1	1212	7	1
2	01181	0	5
3	01144	0	12

ARS Routing Plan No. 1

Time Table*1			Carrier*2		
			Priority 1	Priority 2	
Monday	Time Block A	9:00	Carrier A	Carrier M	
	Time Block B	12:00	Carrier A	Carrier M	
	Time Block C	17:00	Carrier C	Carrier M	
	Time Block D	23:00	Carrier J	Carrier M	

*1 → 10.4 [8-3] Routing Plan Time—Time Setting
→ [330] ARS Routing Plan Time Table

*2 → 10.5 [8-4] Routing Plan Priority
→ [331–346] ARS Routing Plan Table (1–16) (KX-NCP500/KX-NCP1000/KX-TDE100/KX-TDE200 only)
→ [347] ARS Routing Plan Table (1–48)

5. Carrier Table

Each carrier must be programmed in the Carrier Table. Here each carrier is assigned a carrier number, name, the CO lines it is used with, etc.

→ 10.6 [8-5] Carrier—Carrier

Carrier Name: Assign a name for the carrier. Used only as a reference.

Trunk Group: Assign the trunk groups which can be used when making calls via this carrier and the priority in which they are selected. When using PC programming, trunk groups can be assigned to a carrier using an on/off setting for each trunk group. They can also be given a priority setting (1–4) which decides the order they are searched when seizing a line. If there are no available lines in the trunk groups set to priority 1–4, the other trunk groups set to on are searched in the order of smallest number first.

[Example]

Carrier	Priority Setting				Trunk Groups Set to On	Searching Order
	1	2	3	4		
ABC	9	3	1	7	5, 7, 9, 11	9 → 3 → 1 → 7 → 5 → 11
XYZ	12	4	None	None	6, 10	12 → 4 → 6 → 10

Carrier Access Code: Enter the carrier's access code. Consult carrier for details.

Removed Number of Digits: There may be circumstances where the user-dialed number must be modified in order for the carrier to connect the call. In this case, enter here the number of digits to be removed automatically from the beginning of the dialed number.
Modify Command: When a call is made using this carrier, the telephone number must be modified to meet the criteria required by the carrier in order to connect the call. Program here the commands needed to modify the user-dialed number as necessary.

[Command Explanation]

Command	Description
C	Inserts the Carrier Access Code
H	Inserts the user-dialed number minus any removed digits
P	Analog Line: Inserts a pause ISDN/T1 Line: Inserts a pause and changes dialing mode to tone (DTMF)
A	Inserts the Authorization Code for Tenant
G	Inserts the Authorization Code for Trunk Group
I	Inserts the Itemized Billing Code
[0-9, ✳, #]	You can enter any of these digits in a modify command

[Programming Example: Carrier Table]

	Carrier 1	Carrier 2	
Carrier Name[*1]	Carrier A	Carrier J	
Trunk Group[*2]	1, 2, 3	4	
Carrier Access Code[*3]	0880	0700	
Removed No. of Digits[*4]	1	3	
Modify Command[*5]	CH	CPH	

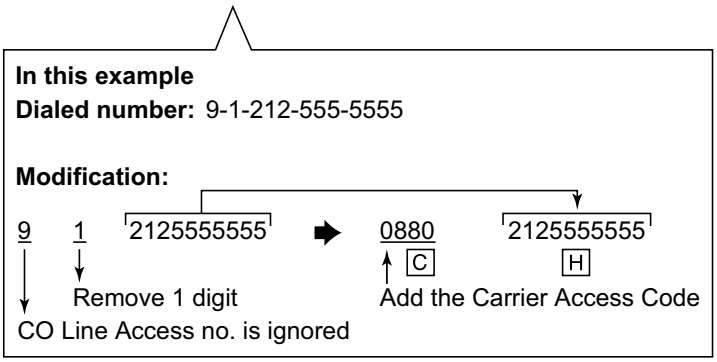

[*1] → 10.6 [8-5] Carrier—Carrier—◆ Carrier Name
→ [350] ARS Carrier Name
[*2] →10.6 [8-5] Carrier—TRG(Priority)
→ 10.6 [8-5] Carrier—TRG 01–TRG 64 (KX-NCP500/KX-NCP1000/KX-TDE100/KX-TDE200), or TRG 01–TRG 96 (KX-TDE600)
→[351] ARS Trunk Group for Carrier Access
[*3] → 10.6 [8-5] Carrier—Carrier—◆ Carrier Access Code
→ [353] ARS Carrier Access Code
[*4] → 10.6 [8-5] Carrier—Carrier—◆ Removed Number of Digits
→ [352] ARS Removed Number of Digits for Carrier Access
[*5] → 10.6 [8-5] Carrier—Carrier—◆ Modify Command

6. ARS Options

Authorization Code for Tenant

A Carrier Authorization Code can be assigned to each tenant.
→ 10.6 [8-5] Carrier—Authorization Code for Tenant

Authorization Code for Trunk Group

A Carrier Authorization Code can be assigned to each trunk group.
→ 10.8 [8-7] Authorization Code for TRG

Itemized Billing Code

An Itemized Billing Code can be assigned for each extension and for each verification code.
If a call is not made from an extension, such as via Direct Inward System Access (DISA) or TIE line, and no verification code is used, the Itemized Billing Code assigned to location 1 in the Verification Code Table will be used.
→ 6.1 [4-1-1] Wired Extension—Extension Settings—Option 1—◆ ARS Itemized Code/2nd CLIP (10 digits)
→ 6.10 [4-2-1] Portable Station—Extension Settings—Option 1—◆ ARS Itemized Code/2nd CLIP (10 digits)
→ 8.3 [6-3] Verification Code—◆ Itemized Billing Code for ARS

Conditions

CAUTION

The software contained in the ARS feature to allow user access to the network must be upgraded to recognize newly established network area codes and exchange codes as they are placed into service. Failure to upgrade the premises PBXs or peripheral equipment to recognize the new codes as they are established will restrict the customer and the customer's employees from gaining access to the network and to these codes.
KEEP THE SOFTWARE UP-TO-DATE WITH THE LATEST DATA.

- **Logging Outgoing Calls by SMDR**
  Whether SMDR logs the user-dialed number or the ARS-modified number is determined through system programming. (→ 16.1.4 SMDR (Station Message Detail Recording))
  → 13.1 [11-1] Main—SMDR Options—◆ Option—ARS Dial
- **ARS Data Import/Export**
  ARS tables and data can be copied to and from the PBX and a PC using the Maintenance Console software. Files are saved in CSV (Comma Separated Value) format. Because of the large amounts of programming that may be necessary to use ARS effectively, you may choose to export ARS tables and data to a PC, edit them using the software of your choosing, then import the new data to the PBX. This is particularly convenient if you need to update your ARS tables for new area codes or telephone rates, or when you'd like to copy ARS tables from one PBX to another.
  → 2.5.8 Tool—Import
  → 2.5.9 Tool—Export
- **TRS**
  Toll Restriction (TRS) checks are performed before ARS number modification, so program TRS Denied Code Tables and Exception Code Tables accordingly. (→ 17.1.6 TRS (Toll Restriction))
- **When ARS Routing Takes Place**
  ARS routing takes place after the preprogrammed number of digits (leading number + additional number of digits) have been dialed.

PC Programming Manual References

2.5.8 Tool—Import
→ARS - Leading Digit

→ARS - Except Code
→ARS - Routing Plan
2.5.9 Tool—Export
4.5 [2-3] Timers & Counters—Dial / IRNA / Recall / Tone—◆ Dial—Extension Inter-digit
4.18 [2-9] System Options—Option 3—◆ Dial Tone—Dial Tone for ARS
6.1 [4-1-1] Wired Extension—Extension Settings—Option 1—◆ ARS Itemized Code/2nd CLIP (10 digits)
6.10 [4-2-1] Portable Station—Extension Settings—Option 1—◆ ARS Itemized Code/2nd CLIP (10 digits)
8.3 [6-3] Verification Code—◆ Itemized Billing Code for ARS
Section 10 [8] ARS
13.1 [11-1] Main—SMDR Options—◆ Option—ARS Dial

PT Programming Manual References

[320] ARS Mode
[321] ARS Leading Number
[322] ARS Routing Plan Table Number
[325] ARS Exception Number
[330] ARS Routing Plan Time Table
[331–346] ARS Routing Plan Table (1–16) (KX-NCP500/KX-NCP1000/KX-TDE100/KX-TDE200 only)
[347] ARS Routing Plan Table (1–48)
[350] ARS Carrier Name
[351] ARS Trunk Group for Carrier Access
[352] ARS Removed Number of Digits for Carrier Access
[353] ARS Carrier Access Code

Feature Manual References

21.1 Capacity of System Resources

1.1.4 Automatic Callback Busy (Camp-on)

Description

If the line is busy when a call is made, a callback ring can inform the caller when the line becomes free. If the called party was another extension, or if the dialed number is handled by Automatic Route Selection (ARS), the number is automatically redialed after the extension user answers the callback ring.

Conditions

- If the callback ring is not answered within 10 seconds, callback is canceled.
- If the extension hears a busy tone before dialing the telephone number, only the CO line or trunk group is reserved. After answering the callback ring, the extension should dial the telephone number.
- An extension can set only one Automatic Callback Busy. The last setting is effective.
- Multiple extension users can set this feature for the same CO line at the same time.
  However, a maximum of four extension users can set this feature to one extension.
  Callback ringing will be sent to extensions in the order that the feature was set. In other words, the extension that set the feature first will receive a callback ringing first.
- This feature cannot be used for calls to a Voice Processing System (VPS).

PC Programming Manual References

4.9 [2-6-1] Numbering Plan—Main—Features—◆ Automatic Callback Busy Cancel
4.11 [2-6-3] Numbering Plan—B/NA DND Call Feature—◆ Automatic Callback Busy

Operating Manual References

1.3.4 Automatic Callback Busy (Camp-on)

1.1.5 Automatic Extension Release

Description

After going off-hook, if an extension user fails to dial any digits within a preprogrammed time period, the user will hear a reorder tone. This operation applies to intercom calls only.
This feature is also known as Automatic Station Release.

Conditions

- A proprietary telephone (PT)/portable station (PS) user hears a reorder tone for a preprogrammed time period, and then the PT/PS returns to idle status automatically. A single line telephone (SLT) user will hear a reorder tone until he or she goes on-hook.
- **This feature works in one of the following cases:**
  When making an intercom call
  a. The first digit is not dialed within a preprogrammed time period.
  b. A digit is dialed, but subsequent digits are not dialed within a preprogrammed time period.

PC Programming Manual References

4.5 [2-3] Timers & Counters—Dial / IRNA / Recall / Tone
→◆ Dial—Extension First Digit
→◆ Dial—Extension Inter-digit
→◆ Tone Length—Reorder Tone for PT Handset
→◆ Tone Length—Reorder Tone for PT Hands-free

1.1.6 Automatic Fax Transfer

Description

The PBX can distinguish between fax calls and other types of calls arriving on DISA lines, and automatically transfer fax calls to preprogrammed destinations. When a call arrives on a DISA line, an OGM is played (→ 12.1.2 OGM (Outgoing Message)). At the same time, the PBX begins fax signal detection. If a fax signal is detected, the PBX recognizes that the call is a fax call, and transfers the call to the fax destination assigned to that OGM through system programming. This allows a single CO line to be used seamlessly for both voice and fax calls, with only voice calls arriving at user extensions.

[Available Automatic Fax Transfer Destinations]

Destination	Availability
Wired Extension (PT/SLT/T1-OPX)	✓

Destination	Availability
PS	✓*1
ICD Group	✓
SIP Extension	
PS Ring Group	
Floating Extension no. for SVM	
VM Group (DTMF/DPT)	
External Pager (TAFAS)	
DISA	
Analog/ISDN Remote Maintenance	
Idle Line Access no. + Phone no.	
Trunk Group Access no. + Trunk Group no. + Phone no.	
Extension of Another PBX (via TIE Line, Access with PBX Code)	
Extension of Another PBX (via TIE Line, Access without PBX Code)	

*1 A PS destination can be used to forward fax calls to a fax machine at another PBX connected by TIE line.
A virtual PS can be specified as the destination of fax calls. Then, the extension number of the fax machine at the other PBX can be specified as the FWD—ALL Calls destination for calls to that virtual PS. (→ 19.1.2 Virtual PS)

Conditions

- **Hardware Requirement:**
  An OPB3 card and ESVM4 card
- When using this feature, it is necessary to disable the **MSG Feature** setting of the MPR card.
- This feature is only effective for calls arriving on DISA lines.
- If a fax signal is not detected before the DISA Intercept Routing—No Dial timer expires, the call is redirected to the operator extension, and fax detection ends.
- It is not recommended to use the CNG feature when an MSG card is installed in the PBX.

Installation Manual References

KX-NCP500/KX-NCP1000

3.7.1 OPB3 Card (KX-NCP1190)
3.7.5 MSG4 Card (KX-TDA0191)
3.7.6 ESVM4 Card (KX-TDA0194)

KX-TDE100/KX-TDE200

3.7.1 OPB3 Card (KX-TDA0190)
3.7.5 MSG4 Card (KX-TDA0191)
3.7.6 ESVM4 Card (KX-TDA0194)

KX-TDE600

3.9.1 OPB3 Card (KX-TDA0190)
3.9.4 MSG4 Card (KX-TDA0191)
3.9.5 ESVM4 Card (KX-TDA0194)

PC Programming Manual References

3.5 [1-1] Slot—OPB3 Card Property—◆ MSG Feature
7.4 [5-3-2] Voice Message—DISA Message—◆ Fax Extension

Feature Manual References

4.1.8 DISA (Direct Inward System Access)

1.1.7 Automatic Time Adjustment

Description

The PBX clock can be adjusted automatically in the following two ways:

1. **Daylight Saving Time Setting**
   The start and end dates of Daylight Saving Time can be programmed. The PBX clock will automatically adjust itself one hour forward or backward at 2:00 A.M. on the programmed date, if enabled through system programming. At 2:00 A.M. on the start date, the clock will change to 3:00 A.M., and at 2:00 A.M. on the end date, the clock will change to 1:00 A.M.

   Note

   If a Timed Reminder (Remote Wake-up call) is set:
   – On the Daylight Saving Time start date, a reminder set for between 2:00 A.M. and 3:00 A.M. will not ring.
   – On the Daylight Saving Time end date, a reminder set for between 1:00 A.M. and 2:00 A.M. will ring twice.

2. **Time Information from Telephone Company**
   Time information can be received when
   – An incoming or outgoing call through an ISDN line is received/made.
   – An incoming call through an analog line with Caller ID which includes time information is received.
   The PBX clock will be adjusted everyday with the first call after 3:05 AM, if enabled through system programming.

   Note

   If a Timed Reminder (Remote Wake-up call) is set, the setting will not ring or will ring twice depending on the adjustment.

3. **Time Information through Simple Network Time Protocol (SNTP)**
   By connecting the PBX to an SNTP server, it is possible to receive and update the time setting. The PBX clock will be adjusted everyday at 3:05 AM, if enabled through system programming.

Conditions

[General]

- Through system programming, it is possible to specify SNTP, ISDN, or neither method as the selected method of automatic time adjustment.
- Station Message Detail Recording (SMDR) will log call information using the PBX clock so that the logging time will be overlapped at the end of Daylight Saving Time. (→ 16.1.4 SMDR (Station Message Detail Recording))

[SNTP Time Information]

- The time set through SNTP will apply the same to all PTs and IP-PTs connected to the PBX, regardless if an IP extension is located in another time zone.

PC Programming Manual References

4.2 [2-1-2] Date & Time—SNTP / Daylight Saving—◆ Automatic Time Adjustment
4.3 [2-1-2] Date & Time—SNTP / Daylight Saving—Daylight Saving

Feature Manual References

9.1.16 ISDN (INTEGRATED SERVICES DIGITAL NETWORK) FEATURES
17.1.4 Timed Reminder

Section 2

Features and Configurations—B

2.1 B

2.1.1 BGM (Background Music)

Description

A proprietary telephone (PT) user can listen to background music (BGM) through the built-in speaker while on-hook and idle. The following audio sources are available for BGM:

- External Music Source
- Internal Music Source
- Outgoing Message (OGM)

BGM—External:
BGM can also be broadcast in the office through external pagers (loudspeakers) and can be turned on and off by an extension assigned as a manager.

Conditions

[BGM]

- **Hardware requirement:** User-supplied music source (when an external music source is assigned)
- The music heard through the PT is interrupted when going off-hook.
- Each extension user can select the audio source.
- Through system programming, it is possible to specify the maximum number of IP-PTs connected to a V-IPEXT card that can simultaneously perform the BGM feature. Changing this setting may affect the number of simultaneous IP extension and IP CO line calls available on the MPR card.

[BGM—External]

- **Hardware requirement:** A user-supplied external pager
- External pagers can be used with the following priorities:
  Trunk Answer From Any Station (TAFAS) → Paging → BGM
  (→ 13.1.1 Paging, → 17.1.2 TAFAS (Trunk Answer From Any Station))

Installation Manual References

KX-NCP500/KX-NCP1000

3.10.1 Connection of Peripherals

KX-TDE100/KX-TDE200

3.10.1 Connection of Peripherals

KX-TDE600

3.12.1 Connection of Peripherals

PC Programming Manual References

4.4 [2-2] Operator & BGM
→◆ BGM and Music on Hold—Music Source of BGM (for KX-NCP series)/Music Source of BGM2 (for KX-TDE series)
4.9 [2-6-1] Numbering Plan—Main
→◆ External BGM On / Off
→◆ BGM Set / Cancel

4.20 [2-11-1] Audio Gain—Paging/MOH
→◆ MOH—MOH (Music On Hold) (for KX-NCP series)/MOH 1 (Music On Hold 1) (for KX-TDE series)
→◆ MOH—MOH 2 (Music On Hold 2) (KX-TDE series only)
7.2 [5-2] External Pager

Operating Manual References

1.3.5 BGM (Background Music)
2.1.2 External BGM (Background Music)

Section 3

Features and Configurations—C

3.1 C

3.1.1 CA (Communication Assistant)

Description

Panasonic Communication Assistant (CA) is a CTI application usable with any telephone (except SIP extensions). A CTI server is not required to use CA. CA Client has 4 operating modes: Basic-Express, Pro, Supervisor, and Operator Console.

- **Basic-Express Mode:**
  Only basic features are available, such as call control.
- **Pro Mode:**
  A pro user can see the presence (phone status and absent message) of other extensions.
- **ICD Group Supervisor Mode:**
  A supervisor can use this feature to monitor users within an ICD group from a PC.
- **Operator Console Mode:**
  An operator or secretary can manage and redirect multiple calls simultaneously with a graphical interface.

Class of Service (COS) Settings

The following CA features can be disabled on a COS basis via system programming:

– Chat
– ICD Group Log Out

CA version 3.0 or later is required to disable these features on a COS basis.

Conditions

- Activation keys are required to enable the application, some of which are preinstalled on the MPR card.
- For details, refer to the documentation for CA.

Installation Manual References

KX-NCP500/KX-NCP1000

3.8.4 First Party Call Control CTI Connection

KX-TDE100/KX-TDE200

3.8.4 First Party Call Control CTI Connection

KX-TDE600

3.10.4 First Party Call Control CTI Connection

PC Programming Manual References

3.4 [1-1] Slot—Card Property - IPCMPR (for KX-NCP500/KX-NCP1000/KX-TDE100/KX-TDE200)/IPCEMPR (for KX-TDE600)—Port Number—◆ Built-in Communication Assistant Server
4.12 [2-7-1] Class of Service—COS Settings—CA
6.1 [4-1-1] Wired Extension—Extension Settings—Option 9—◆ Built-in Communication Assistant
6.10 [4-2-1] Portable Station—Extension Settings—Option 9—◆ Built-in Communication Assistant

Feature Manual References

3.1.23 COS (Class of Service)

3.1.2 Call Distribution Port Group

Description

It is possible to set which virtual port receives each call depending on the telephone number of the called party. By assigning each port to a Call Distribution Port Group (CDPG), it is possible to select which group receives each call. CDPG settings cover all V-IPGW cards in the PBX, which allows for ports on different cards to be assigned to the same CDPG. In other words, two 8-port cards can be used as one 16-port card.

Programming Example:

To enable this feature, it is necessary to program the following 2 tables through system programming:

- CDPG Table
  - in order to assign ports to Call Distribution Port Groups.
- Hunt Pattern Table
  - in order to program a priority list of CDPG destinations for each leading number.

[Programming Example of the CDPG Table]

V-IPGW Card Number	Port Number	Call Distribution Port Group*1
1	**1**	**CDPG 1**
1	2	CDPG 2
1	:	:
1	8	CDPG 2
2	**1**	**CDPG 1**
2	:	:
2	8	CDPG 3

*1 → 3.7 [1-1] Slot—Port Property - Virtual IP Gateway Port—◆ Call Distribution Port Group

[Programming Example of the Hunt Pattern Table]

No.	Leading Number*1	Call Distribution Port Group (1st)*2	Call Distribution Port Group (2nd)*2	…	Call Distribution Port Group (16th)*2
1	**10**	**CDPG 1**	**CDPG 4**	**…**	**-**
2	20	CDPG 1	CDPG 2	…	CDPG 3
:	:	:	:	…	:
32	300	CDPG 8	CDPG 11	…	**-**

*1 → 3.13 [1-1] Slot—Shelf Property - Virtual IP Gateway—Hunt Pattern—Hunt Pattern 1–16—◆ Leading Number

*2 → 3.13 [1-1] Slot—Shelf Property - Virtual IP Gateway—Hunt Pattern—Hunt Pattern 1–16—◆ Call Distribution Port Group—1st–16th

Note

The same CDPG can be set for several leading numbers.

Explanation:

As shown in the CDPG table above, CDPG 1 consists of Port 1 of the first card and Port 1 of the second card. When "1023-456-7890" (leading number: 10) is dialed:

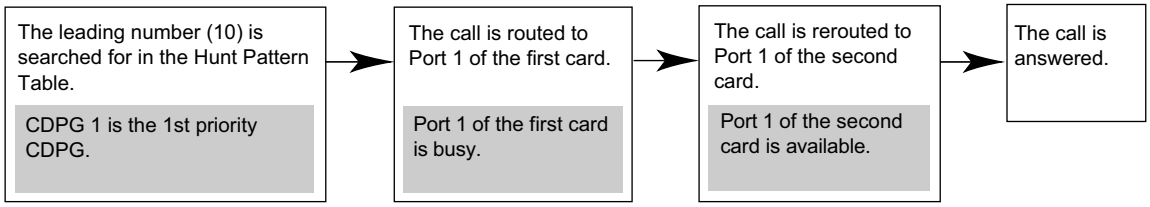

If all the ports belonging to CDPG 1 are busy, the call is rerouted to the lowest-numbered available port belonging to CDPG 4, which is set as the second priority for this leading number.

Installation Manual References

KX-NCP500/KX-NCP1000

3.4.1 Virtual Cards

KX-TDE100/KX-TDE200

3.4.1 Virtual Cards

KX-TDE600

3.4.1 Virtual Cards

PC Programming Manual References

3.7 [1-1] Slot—Port Property - Virtual IP Gateway Port
3.13 [1-1] Slot—Shelf Property - Virtual IP Gateway—Hunt Pattern

Feature Manual References

13.1.26 Private Network Features—VoIP (Voice over Internet Protocol)

3.1.3 Caller ID

Description

The PBX can receive Caller ID information (a caller's name and telephone number) from calls received on CO lines. This information can be shown on a proprietary telephone (PT) display when receiving a call and can be used to direct calls from specific callers to specific destinations automatically. Additionally, Caller ID information is logged in the Incoming Call Log of the extension which received the call, allowing the caller to view a record of incoming calls or make a call to a person in the call log later.
The PBX can be programmed to modify a caller's telephone number when it is received and, for example, add a CO Line Access number or add/delete certain digits of incoming telephone numbers automatically. This allows an extension user to be able to make a call later to a telephone number logged in his or her call log without worrying about CO Line Access numbers, area codes, etc.

Note

- The term "Caller ID" used in this Feature Manual refers to features that can receive caller information sent from the telephone company and received on analog, ISDN, and T1 lines. Your network provider may use a different name for this type of service.

- To receive Caller ID information, you must subscribe to the telephone company's Caller ID service and enable Caller ID for the appropriate CO line through system programming.

Caller ID to SLT Port:
Caller ID information can also be shown on a single line telephone (SLT) display. This feature is available only for SLTs compatible with FSK-type Caller ID.

1. **Caller ID Features**
   There are three features which can receive Caller ID information. The available feature depends on the type of CO line receiving the call.

Feature	Description	Details in
Caller ID	Receives caller information sent from the telephone company over analog CO lines.	–
Calling Line Identification Presentation (CLIP)	Receives caller information sent from the telephone company over ISDN lines.	–
Automatic Number Identification (ANI)	Receives caller information sent from the telephone company over T1 lines.	→ 17.1.1 T1 Line Service

2. **Caller ID-Related Features**

Feature	Description	Details in
Calling Line Identification (CLI) Distribution	Caller ID information received by the PBX is used to direct calls from specific callers to specific destinations. The caller's telephone number and a destination must be assigned in the System Speed Dialing Table.	→ 3.1.15 CLI (Calling Line Identification) Distribution
Incoming Call Log	Caller information is automatically recorded in the call log of the extension which received the call. This information can be used to view a record of incoming calls or make calls to any number in the call log.	→ 3.1.6 Call Log, Incoming

3. **Automatic Caller ID Number Modification**
   When a call is received, the PBX can automatically modify the caller's telephone number according to a preprogrammed set of rules (Caller ID Modification Table). This modified number will be automatically stored in the extension's Incoming Call Log, allowing the extension user to make a call to this number later without worrying about CO Line Access numbers, area codes, etc.
   Each trunk group can be assigned a modification table. Each table has ten formulas for modifying local/international numbers, and one formula for modifying long distance numbers. When a call is received, the PBX compares the received telephone number to the area codes programmed under "Local/International Call Data" first. If a match is not found, the telephone number will be modified according to the method programmed under "Long Distance Code".

[Programming Example: Caller ID Modification]

<Table Selection>

Trunk Group No.	Modification Table
1	1
2	3

<Modification Table>

Modification Table 1			
	Area Code	Removed No. of Digits	Added No.
Local/International Call Data 1	212	3	0
Local/International Call Data 2	011	3	001
Local/International Call Data 10			
Long Distance Code Data	[Not programmable]	0	0

Note

When Caller ID information is received from a call on an ISDN line and the call type is International, National, or Subscriber, the following modification table is used instead of the above table:

<Modification Table>

	Removed No. of Digits	Added No.
International Call Data	0	011
National Call Data	0	1
Subscriber Call Data	0	

Data entered under "Removed No. of Digits" and "Added No." for International, National, and Subscriber call data will be applied respectively to international, long distance, and local calls.

<Modification Flowchart>

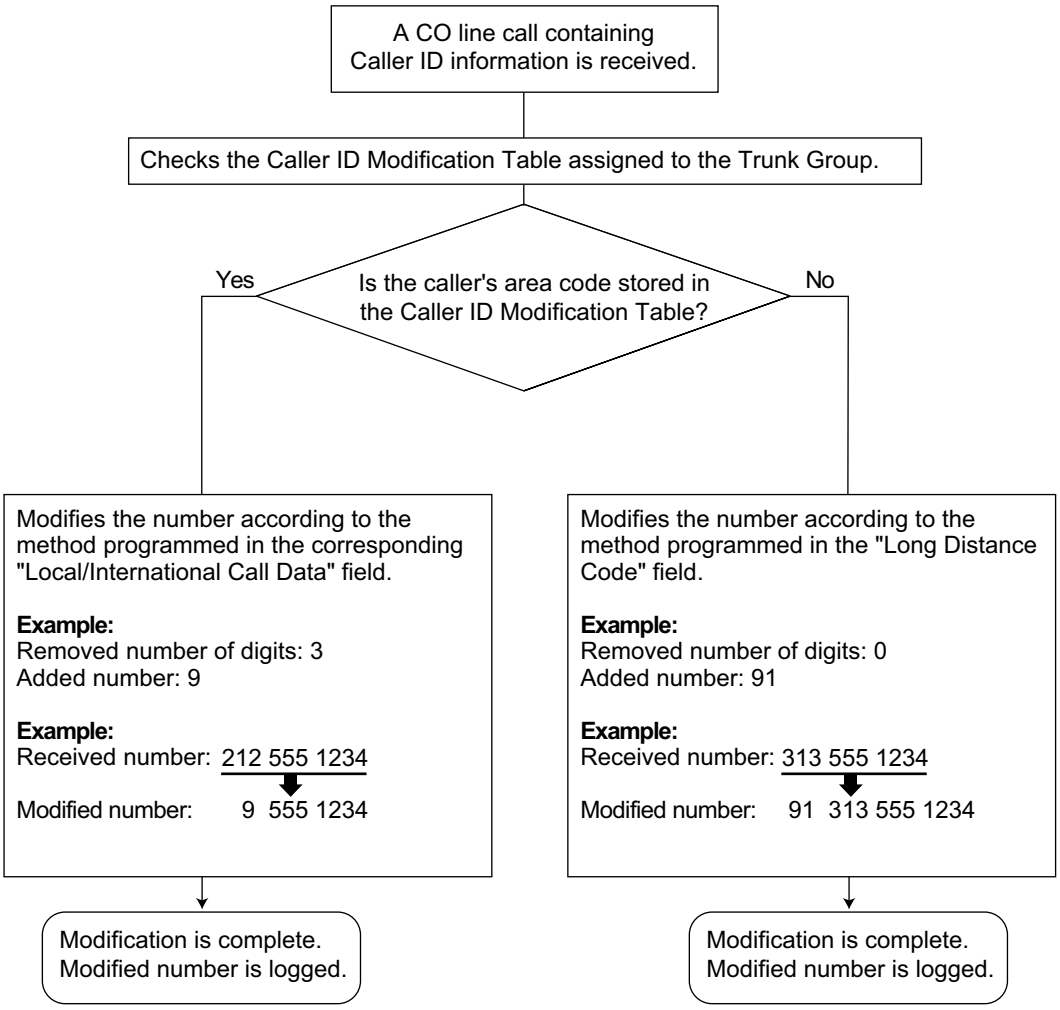

4. System Speed Dialing Table

The System Speed Dialing Table can store telephone numbers, names, and CLI destinations for hundreds of callers.

- **a. Telephone Number:** Contains a CO Line Access number and the caller's telephone number. If Automatic Caller ID Number Modification is used, telephone numbers should be stored in the System Speed Dialing Table in their modified format in order for CLI distribution to function.
- **b. Caller's Name:** Shown on the display and logged (Incoming Call Log, Station Message Detail Recording [SMDR]) when a call from this telephone number is received.
- **c. CLI Destination:** The destination to which an incoming call from the stored telephone number is directed via the CLI distribution feature.

[Programming Example: System Speed Dialing Table]

Location (System Speed Dialing No.)	System Speed Dialing Name*1	Telephone No.*2	CLI Destination*3
000	ABC Company	912125551234	200
001	XYZ Company	913135551234	300

*1 → 8.1 [6-1] System Speed Dial—◆ CO Line Access Number + Telephone Number
→ [001] System Speed Dialing Number
*2 → 8.1 [6-1] System Speed Dial—◆ Name
→ [002] System Speed Dialing Name
*3 → 8.1 [6-1] System Speed Dial—◆ CLI Destination

5. Displaying the Caller's Name

In addition to the System Speed Dialing Table, each extension can store names and numbers in Personal Speed Dialing. Therefore, it is entirely possible for the same telephone number to be stored under a different name in different locations within the PBX.
When a call containing Caller ID information is received, the PBX will search for the caller's name in the following order, then show that name on the display and log it via SMDR.

1. Personal Speed Dialing data of the extension which received the call
2. System Speed Dialing Table
3. The Caller ID information received from the telephone company

If a caller's name is not stored in the PBX or sent from the telephone company, it will not be displayed or logged.

Conditions

[General]

- Caller ID signaling type can be selected through system programming.

[Caller ID to SLT Port]

- **Hardware Requirement:**
  KX-NCP500/KX-NCP1000: A DHLC4 card, SLC8 card, or SLC16 card
  KX-TDE100/KX-TDE200: An SLC8 card with an EXT-CID card installed, a CSLC16 card, an MCSLC16 card, or an MCSLC24 card
  KX-TDE600: An SLC8 card with an EXT-CID card installed, a CSLC16 card, or an ECSLC24 card, or an EMSLC24 card.
- When the caller's number is sent to an SLT, a CO Line Access number can be automatically added to the telephone number through system programming for calling back.
- When the caller's number exceeds 16 digits, the SLT receives only the first 16 digits, not counting the preceding CO Line Access number (if it is programmed to be added).
- If a call is transferred to an SLT, the transferring extension's information will be shown on the SLT. If the transferring extension goes on-hook before the call is answered, the original caller's information will be shown.
- When Caller ID information such as "Private", "Out of Area", or "Long Distance" is received, this information will be shown instead of the caller's number and name.
- Even if the caller's name is sent, the name may not be shown depending on the type of SLT.
- Incoming Call Log information is not shown on the SLT.
- Caller ID shows whether the call is an intercom or CO line call by default. This setting can be disabled through system programming.

- A caller ID name received from the network via a PRI23 card will not be displayed on an SLT. However, if the received caller ID matches a System Speed Dialing entry, and a name is registered for that entry, it will be displayed.

PC Programming Manual References

4.5 [2-3] Timers & Counters—Miscellaneous
→◆ Caller ID—Waiting to receive
→◆ Caller ID—Visual Caller ID Display
4.18 [2-9] System Options—Option 4—◆ Private Network—Public Call through Private Network—Minimum Public Caller ID Digits
4.19 [2-10] Extension CID Settings
5.1 [3-1-1] Trunk Group—TRG Settings—Main—◆ Caller ID Modification Table
5.3 [3-1-3] Caller ID Modification
6.1 [4-1-1] Wired Extension—Extension Settings—Option 8
→◆ Extension Caller ID
→◆ Incoming Call Wait Timer for Extension Caller ID
8.1 [6-1] System Speed Dial

PT Programming Manual References

[001] System Speed Dialing Number
[002] System Speed Dialing Name
[490] Caller ID Signal Type

Feature Manual References

16.1.4 SMDR (Station Message Detail Recording)
16.1.7 Speed Dialing, Personal
16.1.8 Speed Dialing, System

3.1.4 Caller Information before Executive Busy Override or Call Monitor

Description

A PT/PS user, such as a boss, can confirm the caller information of a call to another extension using a DSS button before performing Executive Busy Override or Call Monitor.
After pressing the corresponding DSS button, and while hearing the busy tone, the user can check the caller's information on the LCD. Then, the user can choose to interrupt the call (Executive Busy Override) or monitor the call, if necessary.

[Example]

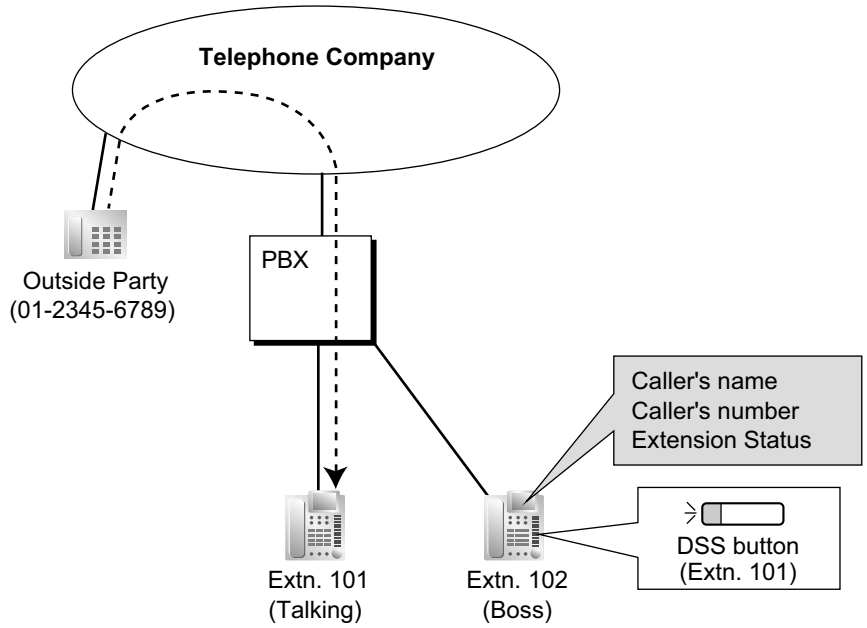

Conditions

- In the following cases, the LCD will not display the caller's information after pressing the corresponding DSS button.
  - If the user's extension is not allowed to use both Executive Busy Override and Call Monitor through COS programming.
  - If the extension receiving the call has the Executive Busy Override Deny feature set.
- The NDSS button is not available for this feature.

Feature Manual References

5.1.3 Executive Busy Override
3.1.7 Call Monitor

3.1.5 Call Hold

Description

An extension user can put a call on hold. The following Hold features are available:

Feature	Description
Regular Hold	Any extension can retrieve a held call.
Exclusive Call Hold	Only the extension user who held the call can retrieve it.

The result of the holding operation can be determined through system programming. Pressing the HOLD button again just after the first time alternates the mode between Regular and Exclusive Call Hold.

Conditions

- **Call Hold Limitation**
  A proprietary telephone (PT) user can hold one intercom call and/or multiple CO line calls at a time. A single line telephone (SLT) user can hold either one intercom call or one CO line call at a time. By using the Call Park feature, PT and SLT users can hold multiple CO line calls and intercom calls simultaneously. (→ 3.1.8 Call Park)
- **Music on Hold**
  Music, if available, is sent to the held party. (→ 11.1.4 Music on Hold)
- **Hold Recall**
  If a call on hold is not retrieved within a preprogrammed time period, the Hold Recall tone is heard at the extension which put the call on hold. If the extension is engaged in a call, the Hold Alarm will be heard.
- If an outside party is placed on hold and the call is not retrieved within a preprogrammed time period after the Hold Recall time expires, the call is automatically disconnected.
- **Automatic Call Hold**
  A PT can be configured through system programming to place the current call on hold when the PT user presses a CO, ICD Group, INTERCOM or PDN button to make or answer another call. If this feature is not enabled, the current call will be disconnected.
  [Example of Automatic Call Hold]
  It is possible to receive an incoming CO line call by pressing the flashing ICD Group button. The current intercom call (on the INTERCOM button) is placed on hold. To return to the held call, press the INTERCOM button.
- **Call Hold Retrieve Deny**
  Internal Call Block (→ 9.1.14 Internal Call Block) also determines which extensions' calls an extension user can retrieve, i.e., if extension 101 cannot call extension 201, then it cannot retrieve extension 201's held calls either.
- **SLT Hold Mode**
  It is possible to choose how to hold and transfer a call with an SLT through system programming. The following methods are available:

	Hold	**Hold (to be Retrieved from Another Extension)**[*1]	**Transfer to CO Line**	**Transfer to Extension**
Mode 1	Flashing the hookswitch + Going on-hook	Flashing the hookswitch + Hold Feature No. + Going on-hook	Flashing the hookswitch + CO Line Access No.	Flashing the hookswitch + Extension No.
Mode 2 (Default)	Flashing the hookswitch + Hold Feature No. + Going on-hook	Flashing the hookswitch + Hold Feature No. + Going on-hook	Flashing the hookswitch + CO Line Access No.	Flashing the hookswitch + Extension No.

	Hold	Hold (to be Retrieved from Another Extension)[*1]	Transfer to CO Line	Transfer to Extension
Mode 3	Flashing the hookswitch + Hold Feature No. + Going on-hook	Flashing the hookswitch + Hold Feature No. + Hold Feature No. + Going on-hook	Flashing the hookswitch + Hold Feature No. + CO Line Access No.	Flashing the hookswitch + Extension No.
Mode 4	Flashing the hookswitch + Hold Feature No. + Going on-hook	Flashing the hookswitch + Hold Feature No. + Hold Feature No. + Going on-hook	Flashing the hookswitch + Hold Feature No. + CO Line Access No.	Flashing the hookswitch + Hold Feature No. + Extension No.

[*1] These operations must be performed when the held call is intended to be retrieved from another extension using the holding extension number.

If one of the following occurs frequently with an SLT, choose "**Mode 2**", "**Mode 3**", or "**Mode 4**":

a. When an SLT user answers a call, a reorder tone is heard or no one is heard on the other end.

b. When an SLT user goes off-hook, a reorder tone is heard instead of a dial tone.

If a call is not terminated after going on-hook, the above cases occur. To avoid these problems, choose "**Mode 2**", "**Mode 3**", or "**Mode 4**". Every call will be terminated unless the Hold feature number is entered after flashing the hookswitch in Mode 2, Mode 3, and Mode 4.

- Hold Alarm tone pattern has a default. (→ 21.2 Tones/Ring Tones)

PC Programming Manual References

4.5 [2-3] Timers & Counters—Dial / IRNA / Recall / Tone
→◆ Recall—Hold Recall
→◆ Recall—Disconnect after Recall
4.9 [2-6-1] Numbering Plan—Main—Features
→◆ Call Hold / Call Hold Retrieve
→◆ Call Hold Retrieve : Specified with a Holding Extension Number
→◆ Hold Retrieve : Specified with a Held CO Line Number
4.18 [2-9] System Options
→Option 1—◆ PT Operation—Automatic Hold by ICM / CO / ICD Group key
→Option 1—◆ PT Operation—Hold Key Mode
→Option 5—◆ SLT—SLT Hold Mode

PT Programming Manual References

[200] Hold Recall Time

Operating Manual References

1.3.6 Call Hold

3.1.6 Call Log, Incoming

Description

When a call containing Caller ID information is received by an extension, the information is shown on the telephone display, notifying the extension user of the caller's identity. Also, depending on system programming, incoming intercom calls (including over a TIE connection) are logged in the incoming call log. This information is also automatically logged in the Incoming Call Log of the extension, and can be viewed later or used to call that caller back.

Each extension and incoming call distribution (ICD) group has its own Incoming Call Log.

Call Log Button

The Call Log button will alert an extension user to any missed (unanswered) calls. A flexible button can be customized as the Call Log button, and will indicate the status of the Incoming Call Log for the extension or corresponding ICD group, as shown below.

Light pattern	Status of the corresponding call log
Red on	There are call records in the log which have not been viewed.
Off	There are no new call records in the log.

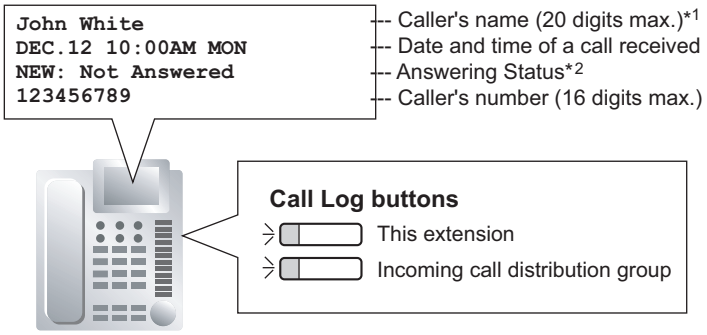

*1: If a call is received from an extension and no name is assigned to the extension, the incoming call log shows the extension number.

*2: "NEW" is displayed for call records which have not previously been viewed; "OLD" is displayed for call records which have previously been viewed.

Conditions

- The following information is logged.

Telephone / Information	KX-T7636/KX-T7633/ KX-T7630/KX-T7433	3-line display PT except KX-T7633/KX-T7630/ KX-T7433	1-line or 2-line display PT
	KX-NT500 series/KX-NT400/ KX-NT300 series (except KX-NT321)/ KX-DT300 series (except KX-DT321)/ KX-NT136		KX-NT321/KX-NT265/ KX-DT321
	KX-TD7695/KX-TD7685/ KX-TD7694/KX-TD7684/ KX-TD7690/KX-TD7680/ KX-TD7696/ KX-TCA185/KX-TCA285/KX-TCA385 KX-WT125/KX-WT126		Wireless phone (KX-TD7895/KX-T7885)
	6-line display PT		
Caller's Name	✔	✔	✔
Date/Time call received	✔	✔	—
Answered or Not Answered Confirmed or Not Confirmed	✔	✔	—
Caller's Phone Number	✔	—*1	—*1

*1 If the caller's name is not logged, the caller's phone number is displayed.
If the caller's name is logged, the caller's phone number is not displayed.

- If the answering destination is not the original extension (e.g., Call Pickup or FWD—No Answer), the call is logged in the Incoming Call Logs of both the original and the answering destination. If a call is forwarded to multiple extensions before being answered, the call is logged in the call logs of all the extensions it was forwarded to. If a call is forwarded to an ICD group and is not answered, the call is not logged in the call log for the ICD group.
- The following types of calls will be recorded as "Not Answered" in the incoming call log of the original destination:
  – Calls received when the extension is in use (the caller hears a busy tone).
  – Calls rerouted using the Intercept Routing—Busy, FWD—All Calls, or FWD—Busy features.

  If disabled through system programming, these types of calls will not leave a record in the incoming call log.
  It is also possible to specify through system programming if calls answered using Call Pickup are recorded as "Not Answered" or "Answered" in the incoming call log of the original destination.
- **Incoming Call Log for Calls to a PS**
  Each portable station (PS) also has an Incoming Call Log. When a call is directed to a PS, the call will be logged in the call log of the PS even when:
  a. The PS is out of range.
  b. The PS is turned off.
  c. The Cell Station (CS) is busy.
- **Display Lock**
  The Incoming Call Log of an extension can be locked through personal programming (Directory and Call Log Lock) to prevent other users from viewing its contents. In this case, the Outgoing Call Log display, the Personal Speed Dialing number display and the SVM Log display are also locked, and the voice messages in the user's message box cannot be played back.

An extension personal identification number (PIN) is required to use this feature. (→ 5.1.6 Extension PIN (Personal Identification Number))

- **Storing the Call Log Information from an Extension**
  Depending on system programming, the information about an extension (including over a TIE connection) logged in the incoming call log can be stored in Personal Speed Dialing.
- **Incoming Call Log Memory**
  The total number of incoming calls that can be logged by the PBX is limited. The maximum number of calls that can be logged in the Incoming Call Log of each extension and ICD group can be specified through system programming. When a call log is full, the oldest call will be replaced each time a call is received.
- **Automatic Caller ID Number Modification**
  If the PBX is programmed to automatically modify incoming telephone numbers, the modified numbers will be logged in the Incoming Call Log.
- **Call Log for Incoming Call Distribution Group Calls**
  If the original destination of a call is an incoming call distribution group, and the call is not answered, the information is logged in the call log for the group. If it is answered, the information is logged in the call log for the answering extension.
- Through system programming, it is possible to select which Incoming Call Logs record call information when a call to an incoming call distribution group is answered by a member of the group:
  – Only the Incoming Call Log of the extension that answered the call.
  – Both the Incoming Call Log of the extension that answered the call and that of the incoming call distribution group.
- Through system programming, it is possible to select which Incoming Call Logs record call information when a call to an incoming call distribution group is answered by the overflow destination of the group:
  – Only the Incoming Call Log of the overflow destination.
  – Both the Incoming Call Log of the overflow destination and that of the incoming call distribution group.
- Incoming CO line calls to the ICD Group are logged in the incoming call log.
  When the **Incoming Call Log—Extension/TIE Call** setting is enabled, the extension number of the ICD group is logged in the incoming call log of the extension that answered the call.

PC Programming Manual References

4.18 [2-9] System Options—Option 7
→◆ Incoming Call Log—Busy / Intercept (when Called Party is Busy)
→◆ Incoming Call Log—Fwd All / Fwd Busy
→◆ Incoming Call Log—Call Pickup
→◆ Incoming Call Log—Extension/TIE Call
5.12 [3-5-1] Incoming Call Distribution Group—Group Settings—Group Log / Group FWD—◆ Incoming Call Log Memory
5.15 [3-5-3] Incoming Call Distribution Group—Miscellaneous
→◆ Options—Call Log to ICD Group when ICD Member Answered
→◆ Options—Call Log to ICD Group when Overflow Destination Answered
6.1 [4-1-1] Wired Extension—Extension Settings
→Option 5—◆ Incoming Call Display
→Option 6—◆ Display Lock / SVM Lock
→Option 7—◆ Incoming Call Log Memory
6.5 [4-1-4] Wired Extension—Flexible Button
→◆ Type
→◆ Extension Number (for Call Log)
6.10 [4-2-1] Portable Station—Extension Settings
→Option 5—◆ Incoming Call Display
→Option 7—◆ Incoming Call Log Memory
6.18 [4-3] DSS Console
→◆ Type

→◆ Extension Number (for Call Log)

Feature Manual References

3.1.3 Caller ID
6.1.3 Flexible Buttons
16.1.7 Speed Dialing, Personal
21.1 Capacity of System Resources

Operating Manual References

1.4.1 Call Log, Incoming
3.1.2 Personal Programming

3.1.7 Call Monitor

Description

Allows an extension user to listen to a busy extension user's existing conversation. The user can hear the conversation but will not be heard. If desired, the monitoring user can interrupt the call to establish a three-party conference call.

Conditions

- Class of Service (COS) programming determines extension users who can use this feature.
- This feature is available only when the busy extension is in a conversation with another extension or outside party.
- This feature will not function when the busy extension:
  a. Has set Executive Busy Override Deny (→ 5.1.3 Executive Busy Override) or Data Line Security (→ 4.1.1 Data Line Security).
  b. Is receiving an Off-hook Call Announcement (OHCA) (→ 12.1.3 OHCA (Off-hook Call Announcement)) or Whisper OHCA (→ 20.1.4 Whisper OHCA).
  c. Is on a conference call (→ 3.1.19 Conference, → 5.1.3 Executive Busy Override, → 13.1.14 Privacy Release).
  d. Is on a doorphone call (→ 4.1.12 Doorphone Call).
  e. Is using Live Call Screening (LCS) or Two-way Record (→ 19.1.4 Voice Mail DPT (Digital) Integration).
  f. Has a call on Consultation Hold (→ 3.1.22 Consultation Hold).
- This feature stops when the busy extension user presses the following buttons during a conversation (→ 6.1.1 Fixed Buttons, → 6.1.3 Flexible Buttons):
  – FLASH/RECALL button
  – HOLD button
  – TRANSFER button
  – CONF (Conference) button
  – DSS button
  – EFA button
  – Two-way Record button
  – Two-way Transfer button
  – One-touch Two-way Transfer button
  – Voice Mail (VM) Transfer button

PC Programming Manual References

4.11 [2-6-3] Numbering Plan—B/NA DND Call Feature—◆ Call Monitor
4.12 [2-7-1] Class of Service—COS Settings—Executive—◆ Call Monitor
6.1 [4-1-1] Wired Extension—Extension Settings
→Option 2—◆ Data Mode
→Option 3—◆ Executive Override Deny
6.10 [4-2-1] Portable Station—Extension Settings—Option 3—◆ Executive Override Deny

Feature Manual References

3.1.23 COS (Class of Service)

Operating Manual References

1.3.7 Call Monitor

3.1.8 Call Park

Description

An extension user can place a call into a common parking zone of the PBX. The Call Park feature can be used as a transferring feature; this releases the user from the parked call to perform other operations. A parked call can be retrieved by any extension user.

Conditions

- **Automatic Call Park**
  It is possible to select an idle parking zone automatically.
- **Retry**
  If the specified parking zone is occupied or there is no vacant zone for Automatic Call Park, the originator will hear a busy tone. Retrying is possible while hearing a busy tone by selecting another parking zone or a vacant zone.
- **Call Park Recall**
  If a parked call is not retrieved within a preprogrammed time period, the Call Park Recall tone will be heard at the Transfer Recall destination assigned to the extension which parked the call. If the destination is engaged in a call, the Hold Alarm will be heard.
- If a parked CO line call is not retrieved within a preprogrammed time period (Default: 30 minutes), it is automatically disconnected.
- **Call Park Button**
  Pressing the Call Park button parks or retrieves a call in a preset parking zone.
  Any flexible button can be customized as the Call Park button. It shows the current status of the preset parking zone as follows:

Light pattern	Status
Slow red flashing	A call is parked in the preset parking zone
Off	There are no parked calls

- **Call Park (Automatic Park Zone) Button**
  Pressing the Call Park (Automatic Park Zone) button parks a call in an idle parking zone automatically.
  Any flexible button can be customized as the Call Park (Automatic Park Zone) button.

- **Call Park Retrieve Deny**
  Internal Call Block (→ 9.1.14 Internal Call Block) also determines which extensions' calls an extension user can retrieve from a parking zone, i.e., if extension 101 cannot call extension 201, then it cannot retrieve extension 201's parked calls either.

PC Programming Manual References

4.5 [2-3] Timers & Counters
→◆ Recall—Call Park Recall
→◆ Recall—Disconnect after Recall
4.9 [2-6-1] Numbering Plan—Main—Features—◆ Call Park / Call Park Retrieve
6.5 [4-1-4] Wired Extension—Flexible Button
→◆ Type
→◆ Parameter Selection (for Call Park)
→◆ Optional Parameter (Ringing Tone Type Number) (for Call Park)
6.13 [4-2-3] Portable Station—Flexible Button
→◆ Type
→◆ Parameter Selection (for Call Park)
→◆ Optional Parameter (or Ringing Tone Type Number) (for Call Park)
6.18 [4-3] DSS Console
→◆ Type
→◆ Parameter Selection (for Call Park)
→◆ Optional Parameter (Ringing Tone Type Number) (for Call Park)

Feature Manual References

6.1.3 Flexible Buttons
21.1 Capacity of System Resources

Operating Manual References

1.3.6 Call Hold

3.1.9 Call Pickup

Description

An extension user can answer a call ringing at any other extension.
The following types of Call Pickup are available:

Type	Description
Directed	A specified extension's call is answered.
Group	A call within a specified call pickup group is answered.

Call Pickup Deny

An extension user can prevent other extensions from picking up calls ringing at his or her own extension.

Caller Information Display before Call Pickup

PT/PS users such as colleagues can confirm the caller information of a call to another extension using the DSS button before picking up the call.

Pressing the corresponding DSS button will call the extension receiving the call rather than picking up the call. While hearing the busy tone, the user can check the caller's information on the LCD. The call can be picked up by pressing the same DSS button again.

[Example]

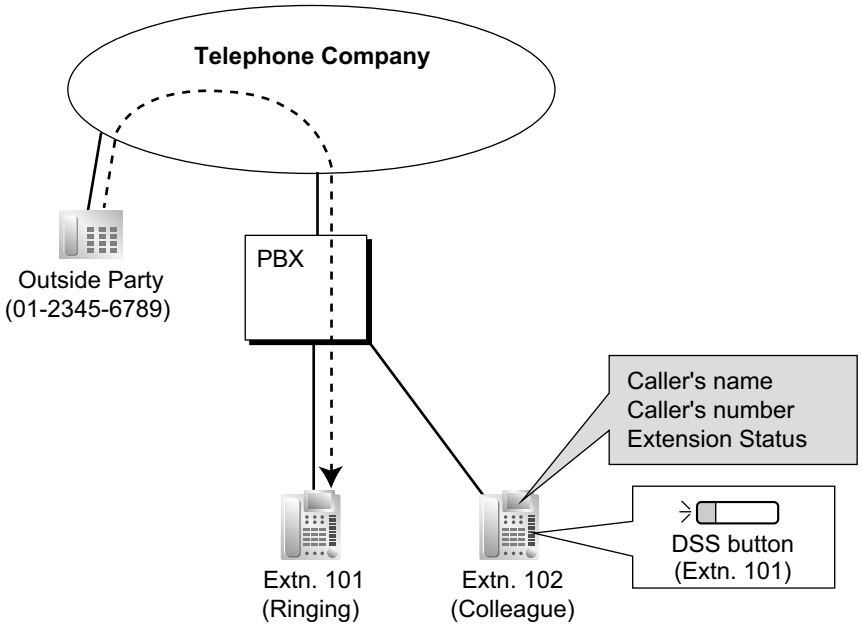

Conditions

- **Call Pickup applies to:**
  Intercom, CO line, and doorphone calls
- **Internal Call Block**
  An extension which cannot call certain extensions based on Class of Service (COS) programming (→ 9.1.14 Internal Call Block) also cannot pick up calls ringing at those extensions.

[Directed Call Pickup]

- A user can also pick up a call to a specified extension by pressing the corresponding DSS button. This feature is only available when (1) the user's extension is allowed to use this feature through COS programming, (2) DSS buttons for extensions or incoming call distribution (ICD) groups have this feature enabled through system programming, and (3) the light pattern of DSS buttons for incoming calls to extensions or ICD groups is set to "**`On or Flash`**" through system programming.
  The light pattern of a DSS button for an incoming call to an extension or Incoming Call Distribution (ICD) group can be programmed through system programming. Call Pickup is available only when the DSS button is red flashing.

[Group Call Pickup]

- A specified number of call pickup groups can be created, each of which consists of extension user groups. One extension user group can belong to several call pickup groups. (→ 7.1.1 GROUP FEATURES)

[Example]

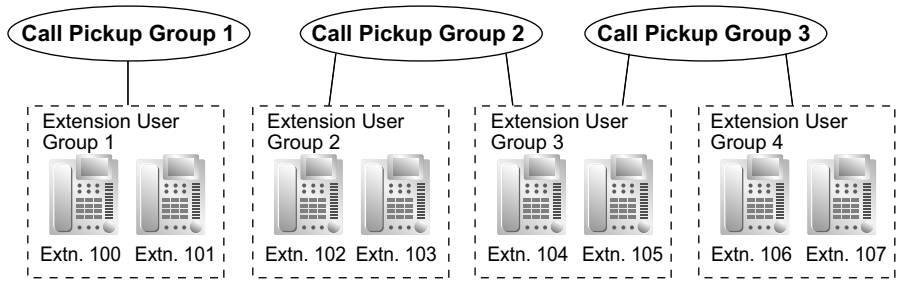

[Caller Information Display before Call Pickup]

- This feature is only available under the following conditions:
  - The "Caller Information Display before Call Pick-up" setting is enabled.
  - Directed Call Pickup is enabled for the extension picking up the call.
  - The assigned button is a DSS button and not an NDSS button.

PC Programming Manual References

4.9 [2-6-1] Numbering Plan—Main—Features
→◆ Group Call Pickup
→◆ Directed Call Pickup
→◆ Call Pickup Deny Set / Cancel
4.12 [2-7-1] Class of Service—COS Settings—Assistant—◆ Call Pickup by DSS
4.18 [2-9] System Options—Option 4
→◆ DSS Key—DSS key mode for Incoming Call
→◆ DSS Key—Call Pick-up by DSS key for Direct Incoming Call
→◆ DSS Key—Call Pick-up by DSS key for ICD Group Call
→◆ DSS Key—Caller Information Display before Call Pick-up
5.7 [3-3] Call Pickup Group
6.1 [4-1-1] Wired Extension—Extension Settings—Option 3—◆ Call Pickup Deny
6.10 [4-2-1] Portable Station—Extension Settings—Option 3—◆ Call Pickup Deny

PT Programming Manual References

[650] Extension User Groups of a Pickup Group

Feature Manual References

3.1.23 COS (Class of Service)
21.1 Capacity of System Resources

Operating Manual References

1.3.9 Call Pickup

3.1.10 Call Splitting

Description

During a conversation, an extension user can call another extension while putting the original party on Consultation Hold. The extension user can then alternate between the two parties and/or connect the original party with the third party.

Conditions

- When the extension user is having a conversation with one party, the other party is in consultation hold. (→ 3.1.22 Consultation Hold)

Operating Manual References

1.3.10 Call Splitting

3.1.11 Call Transfer

Description

An extension user can transfer a call to another extension or an outside party. The following features are available:

Feature	Transferring method
With Announcement	Transfer is completed after announcing the transfer to the destination party.
Without Announcement	Transfer is completed without an announcement. After dialing the transfer destination, the originator can replace the handset once a ringback tone is heard.

Call Transfer with Announcement is also known as Call Transfer—Screened.
Call Transfer without Announcement is also known as Call Transfer—Unscreened.

Transfer Recall for Call Transfer without Announcement

If the transfer destination does not answer within the preprogrammed Transfer Recall time, the call will be redirected to the Transfer Recall destination assigned to the extension which transferred the call.

If the transfer destination has a destination set as Intercept Routing—No Answer, the call will be routed to that destination.

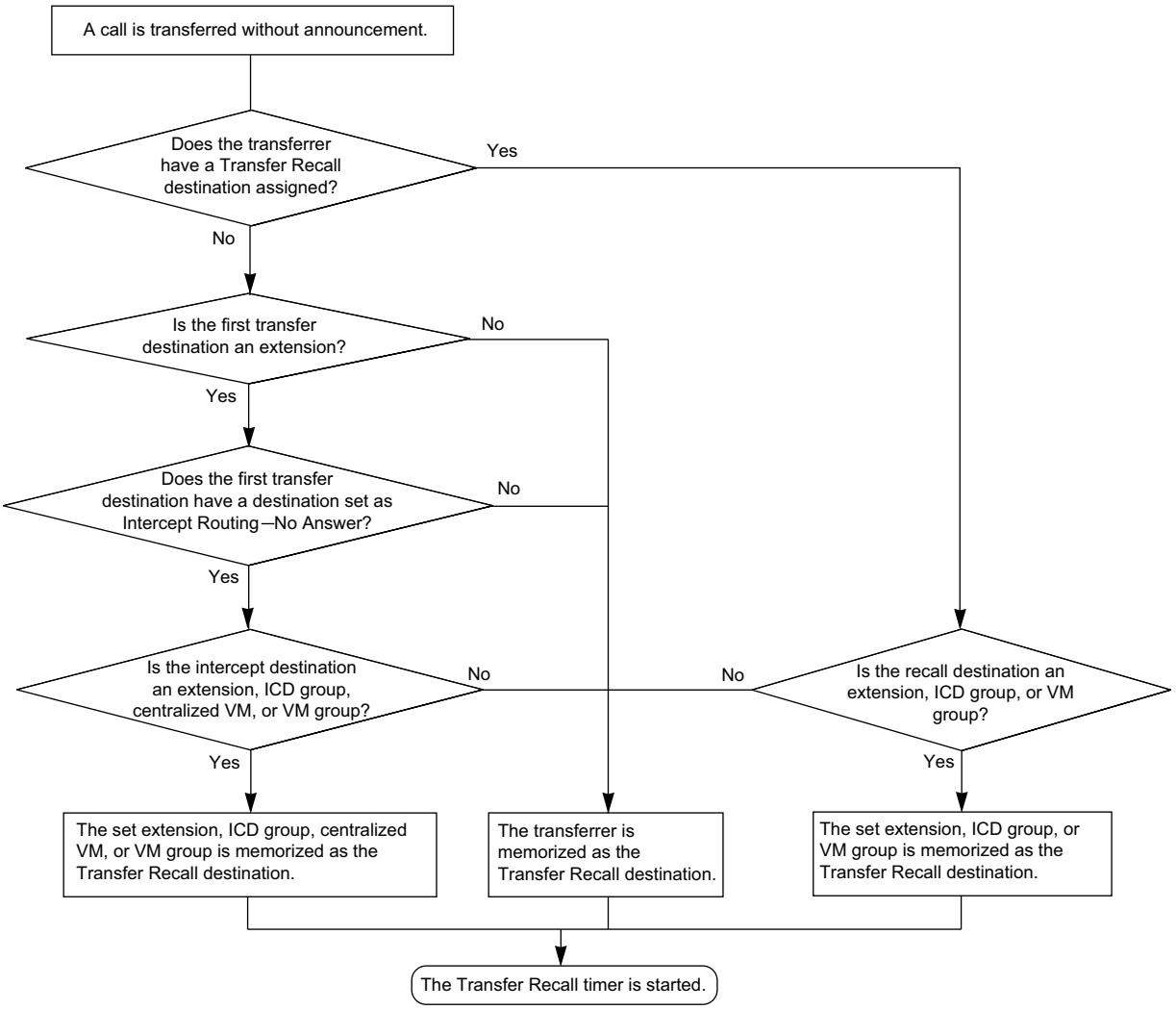

[Available destination]

Destination	Availability
Wired Extension (PT/SLT/SIP Extension/T1-OPX)	✓
PS	✓
ICD Group	✓
PS Ring Group	
Floating Extension no. for SVM	
VM Group (DTMF/DPT)	✓ (DPT only)*1
External Pager (TAFAS)	
DISA	
Analog/ISDN Remote Maintenance	

Destination	Availability
Idle Line Access no. + Phone no.	
Trunk Group Access no. + Trunk Group no. + Phone no.	
Extension of Another PBX (via TIE Line, Access with PBX Code)	
Extension of Another PBX (via TIE Line, Access without PBX Code)	

*1 If the transfer destination does not answer, the call is sent to Voice Mail and a message can be recorded in the mailbox of the transfer destination.

Conditions

- When an extension is transferring a party to another destination, the party will be in consultation hold until they reach the transfer destination. (→ 3.1.22 Consultation Hold)
- If Music on Hold is enabled, music can be sent to the held party while the call is being transferred (→ 11.1.4 Music on Hold). It is programmable whether a ringback tone or music is sent to the caller.
- If the transfer destination extension has set FWD to an outside party, the call will be transferred to the outside party. (→ 6.1.6 FWD (Call Forwarding))
- Class of Service (COS) programming determines the extensions that are able to transfer a call to an outside party. COS can also prohibit transferring to an extension of another PBX via the TIE line service using the PBX code method (Access with PBX Code). (→ 13.1.15 PRIVATE NETWORK FEATURES)
- **One-touch Transfer**
  One-touch Transfer can be performed by pressing a One-touch Dialing button that has been assigned the TRANSFER command and the telephone number of the transfer destination. This is useful for transferring calls to an outside destination. (→ 11.1.2 MEMORY DIALING FEATURES)
- **Automatic Transfer by SDN Button or DSS Button**
  Pressing an SDN button or DSS button during a conversation with an extension or outside party can automatically transfer the call to the specified destination (→ 13.1.7 PDN (Primary Directory Number)/ SDN (Secondary Directory Number) Extension). It is possible through system programming to prevent this feature from operating for extension to extension calls.
- **Transfer to Busy Extension using Queuing (Camp-on Transfer)**
  Through system programming, it is possible to enable the transferring of a call to a busy extension without needing to send a call waiting notification, based on the transferring party's COS setting. The transferred call will be placed in a queue.
- When transferring a call from an analog CO line, users are strongly recommended to perform a screened transfer, so that the outside caller is not automatically connected to an extension using Hands-free Answerback when the extension user is absent.

PC Programming Manual References

4.4 [2-2] Operator & BGM—◆ BGM and Music on Hold—Sound on Transfer
4.5 [2-3] Timers & Counters—Dial / IRNA / Recall / Tone—◆ Recall—Transfer Recall
4.12 [2-7-1] Class of Service—COS Settings—CO & SMDR—◆ Transfer to CO
4.12 [2-7-1] Class of Service—COS Settings—Assistant—◆ Transfer to busy Extension w/o BSS Operation
4.18 [2-9] System Options—Option 4—◆ DSS Key—Automatic Transfer for Extension Call
6.1 [4-1-1] Wired Extension—Extension Settings—Option 1—◆ Transfer Recall Destination
6.10 [4-2-1] Portable Station—Extension Settings—Option 1—◆ Transfer Recall Destination

PT Programming Manual References

[201] Transfer Recall Time
[503] Call Transfer to CO Line
[712] Music for Transfer

Feature Manual References

3.1.23 COS (Class of Service)

Operating Manual References

1.3.11 Call Transfer
1.3.50 PDN (Primary Directory Number)/SDN (Secondary Directory Number) Extension

3.1.12 CALL WAITING FEATURES

Description

Used to inform a busy extension that another incoming call is waiting. The busy extension user can answer the second call by disconnecting the current call or placing it on hold.
The following notification method can be assigned for each extension depending on the call waiting and the telephone type:

a. Call Waiting Tone: Tone from the handset or built-in speaker
b. OHCA: Voice from the built-in speaker
c. Whisper OHCA: Voice from the handset
d. Off: No notification.

Call Type	Notification Method		
	DPT	IP-PT	Other Telephone
Intercom Call	Call Waiting tone/ OHCA/Whisper OHCA/Off	Call Waiting tone/ Whisper OHCA/Off	Call Waiting tone/Off
CO Line Call[*1]	Call Waiting tone/Off		

[*1] Including a doorphone call, call via an incoming call distribution group, and a CO line call transferred from another extension.

Call Waiting is also known as Busy Station Signaling (BSS).

Conditions

- **Automatic Call Waiting**
  Through system programming, it is possible to select whether a call waiting tone is automatically sent to the extension when receiving CO line calls, doorphone calls, external sensor calls and hold-recall calls. Through system programming, it is also possible to select whether extensions will receive Automatic Call Waiting from intercom calls.
- Call Waiting call for an extension in a VM group (DPT/DTMF) is not available.
- **Data Line Security**
  Setting Data Line Security cancels the Call Waiting setting. (→ 4.1.1 Data Line Security)
- **Caller Information**

With the Call Waiting tone, the caller's information flashes on the display for five seconds, followed by a 10-second pause, then flashes again for five seconds.

- **Call Waiting from the Telephone Company**
  Besides the Call Waiting service within the PBX, the Call Waiting tone offered by an analog line from the telephone company informs the extension user of another incoming CO line call that is waiting. He can answer the second call by disconnecting the current call or placing it on hold using EFA. For details, consult your telephone company.
  Call Waiting Caller ID (Visual Caller ID):
  When using the call waiting tone supplied by the telephone company over analog lines, the caller's telephone number and name can be received. Either the name or the number will flash on the display for five seconds, followed by a 10-second pause, then flash again for five seconds.
  Note that the received caller information will not be displayed on telephones or wireless phones connected to SLT ports.
- OHCA and Whisper OHCA are enabled or disabled by the Class of Service (COS) of the calling extension.
- OHCA and Whisper OHCA are not compatible with some telephone types. In such cases, a Call Waiting tone will be sent to the called extension.

OHCA Mode of Calling Extension's COS	Called Extension's Call Waiting Mode			
	OFF	ON		
		Call Waiting Tone	OHCA	Whisper OHCA
Disable	Call Waiting disabled	Call Waiting tone	Call Waiting tone	Call Waiting tone
Enable	Call Waiting disabled	Call Waiting tone	OHCA (or Call Waiting tone)	Whisper OHCA (or Call Waiting tone)

- The notification receiving methods (call waiting tone, OHCA, and Whisper OHCA) are available when the called extension is having a conversation with another party. If the extension is not having a conversation but is unavailable to receive the notification (dialing a number, for example), the calling extension will be kept waiting until the called extension becomes available. Even while waiting, the calling extension will hear a ringback tone.
- If none of these methods of receiving notification (call waiting tone, OHCA, or Whisper OHCA) are set at the called party, the caller will hear a reorder tone after trying to send a call waiting notification.

PC Programming Manual References

3.29 [1-1] Slot—Card Property - LCO type—◆ Caller ID—Caller ID Signaling
4.9 [2-6-1] Numbering Plan—Main—Features
→◆ Manual Call Waiting for Extension Call
→◆ Automatic Call Waiting
4.11 [2-6-3] Numbering Plan—B/NA DND Call Feature
→◆ BSS / OHCA / Whisper OHCA / DND Override
→◆ BSS / OHCA / Whisper OHCA / DND Override-2
4.18 [2-9] System Options—Option 5—◆ Call Waiting—Automatic Call Waiting for Extension Call
6.1 [4-1-1] Wired Extension—Extension Settings
→Option 2—◆ Manual C. Waiting for Extension Call
→Option 2—◆ Automatic C. Waiting
→Option 4—◆ Call Waiting Tone Type
6.10 [4-2-1] Portable Station—Extension Settings
→Option 2—◆ Manual C. Waiting for Extension Call
→Option 2—◆ Automatic C. Waiting

→Option 4—◆ Call Waiting Tone Type

Feature Manual References

3.1.6 Call Log, Incoming
3.1.13 Call Waiting Tone
12.1.3 OHCA (Off-hook Call Announcement)
16.1.4 SMDR (Station Message Detail Recording)
20.1.4 Whisper OHCA

Operating Manual References

1.3.12 CALL WAITING FEATURES
1.3.13 Call Waiting Tone
3.1.2 Personal Programming

3.1.13 Call Waiting Tone

Description

When an extension user attempts to call a busy extension (i.e., an extension that is ringing or having a conversation), a call waiting tone can be sent to the called extension to indicate another call is waiting.

Conditions

- This feature functions only if the called extension has activated call waiting. If it is activated, the calling extension will hear a ringback tone.
- One of two call waiting tones can be selected (Tone 1 or Tone 2) through personal programming (Call Waiting Tone Type Selection).
- A PT user can hear different Call Waiting tones for CO line calls and intercom calls if "**Tone 2**" has been selected through personal programming (Call Waiting Tone Type Selection). If "**Tone 1**" has been selected, the same Call Waiting tone will be heard for both CO line calls and intercom calls.
  All Call Waiting tone patterns have a default (→ 21.2 Tones/Ring Tones).

PC Programming Manual References

4.5 [2-3] Timers & Counters—Miscellaneous—◆ Caller ID—Visual Caller ID Display
4.11 [2-6-3] Numbering Plan—B/NA DND Call Feature
→◆ BSS / OHCA / Whisper OHCA / DND Override
→◆ BSS / OHCA / Whisper OHCA / DND Override-2
6.1 [4-1-1] Wired Extension—Extension Settings
→Option 2—◆ Manual C. Waiting for Extension Call
→Option 2—◆ Automatic C. Waiting
→Option 4—◆ Call Waiting Tone Type
6.10 [4-2-1] Portable Station—Extension Settings
→Option 2—◆ Manual C. Waiting for Extension Call
→Option 2—◆ Automatic C. Waiting
→Option 4—◆ Call Waiting Tone Type

Operating Manual References

1.3.13 Call Waiting Tone
3.1.2 Personal Programming

3.1.14 CELLULAR PHONE FEATURES

Description

This PBX provides features to support the use of cellular phones and other outside destinations with the PBX. Calls can be forwarded from virtual PSs to outside destinations such as cellular phones, and then answered as if the user was at an extension within the PBX. Also, when the receiving extension directly forwards the call to a cellular phone, the cellular phone can use PBX extension features in the same way as if it called the PBX directly.
The following features can be used with cellular phones and other outside extensions:

Feature	Description & Reference
Outside Destinations in Incoming Call Distribution Group	Up to 4 cellular phones can be assigned as members of an Incoming Call Distribution (ICD) Group, and receive calls to the group. → 9.1.4 ICD Group Features—Outside Destinations
Cellular Phone XDP Parallel Mode	A PT user can set up to 4 cellular phones to ring in parallel for incoming calls. → 9.1.4 ICD Group Features—Outside Destinations
Parallel Ringing When Forwarding to CO Line	When an unanswered call is forwarded to an outside line, such as a cellular phone, the forwarding extension's phone will continue ringing until the forwarded call is answered at either phone. → 6.1.6 FWD (Call Forwarding)
DISA Automatic Walking COS	Registered cellular phones are automatically recognized as PBX extensions when calling through DISA. → 4.1.8 DISA (Direct Inward System Access)
DISA Call Transfer From Outside Destination	A cellular phone user who answers a CO line call forwarded from the PBX using DISA can transfer that call to an extension (including over a TIE connection) or to an outside party. It is also possible to establish a Conference call, perform Call Splitting, and page with a call on hold to transfer the call. → 4.1.8 DISA (Direct Inward System Access)
DISA Call Transfer to outside user	From the transfer destination (including the outside party), it is possible to establish a Conference call, perform Call Splitting, and page with a call on hold to transfer the call. → 4.1.8 DISA (Direct Inward System Access)

Conditions

- The KX-NCS3910 (Activation Key for Software Upgrade to Enhanced Version) for the KX-NCP500/ KX-NCP1000, the KX-NCS4910 (Activation Key for Software Upgrade to Enhanced Version) for the KX-TDE100/KX-TDE200, or the KX-NCS4950 (Activation Key for Software Upgrade to Enhanced Version) for the KX-TDE600 is required to use this feature.
- Call disconnection detection
  When LCOT is used for CO line, the system cannot detect the call disconnection. So the system disconnects CO line side after transfer of the call (unscreened transfer).

Feature Manual References

19.1.2 Virtual PS

3.1.15 CLI (Calling Line Identification) Distribution

Description

Directs an incoming CO line call to a specific destination when the caller's telephone number matches a number in the System Speed Dialing Table. Each telephone number in this table can be assigned its own Calling Line Identification (CLI) destination.
CLI distribution allows you to direct calls from specific people to specific destinations, and has many applications. For example, you can program the PBX to automatically connect calls from priority clients to their sales representatives, or automatically connect mobile phone calls from an executive to his or her assistant.
In order for CLI distribution to function, the PBX must receive Caller ID information from the telephone company.
CLI distribution works in conjunction with both Direct In Line (DIL) and Direct Inward Dialing (DID) distribution; it can be enabled or disabled for each CO line (for DIL) and for each DID number, for each time mode.
When a call has Caller ID information and CLI distribution is enabled for the current time mode, CLI distribution will direct the call to its destination, ignoring preprogrammed DIL or DID destinations.

[Programming Example: System Speed Dialing Table]

Location (System Speed Dialing No.)	System Speed Dialing Name*1	Telephone No.*2	CLI Destination*3
000	ABC Company	912125551234	200
001	XYZ Company	913135551234	300

*1 → 8.1 [6-1] System Speed Dial—◆ Name
→ [001] System Speed Dialing Number
*2 → 8.1 [6-1] System Speed Dial—◆ CO Line Access Number + Telephone Number
→ [002] System Speed Dialing Name
*3 → 8.1 [6-1] System Speed Dial—◆ CLI Destination

In this example:
If the caller's telephone number is "1-212-555-1234":

1. The PBX looks for the number in the System Speed Dialing Table. (The CO Line Access number, "9", is disregarded.) The number is found in location 000.
2. If CLI distribution is enabled in the current time mode for the DID number or for the CO line carrying the call (for DIL distribution), the call is routed to its CLI destination, extension 200.

Conditions

- **If Automatic Caller ID Modification is used:**
  Store the modified number in the System Speed Dialing Table.

PC Programming Manual References

8.1 [6-1] System Speed Dial
→◆ Name
→◆ CO Line Access Number + Telephone Number
→◆ CLI Destination
12.2 [10-2] DIL Table & Port Settings—DIL—◆ CLI Ring for DIL—Day, Lunch, Break, Night
12.3 [10-3] DID Table—◆ CLI Ring for DID—Day, Lunch, Break, Night

PT Programming Manual References

[001] System Speed Dialing Number
[002] System Speed Dialing Name

Feature Manual References

3.1.3 Caller ID
4.1.6 DID (Direct Inward Dialing)
4.1.7 DIL (Direct In Line)
9.1.10 INCOMING CALL FEATURES
16.1.8 Speed Dialing, System

3.1.16 CLIP (Calling Line Identification Presentation)

Description

Calling Line Identification Presentation (CLIP):

The PBX can send a preprogrammed telephone number to the network when an extension user makes a call. The called party can see the number on his telephone display before answering the call.

Connected Line Identification Presentation (COLP):

The PBX sends a preprogrammed telephone number to the network when the extension user answers an incoming call. The caller can see the number of the answering party on his telephone display when the call is answered.

[CLIP Example]

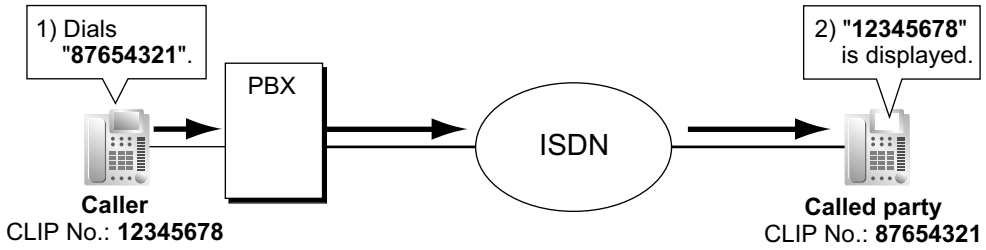

[COLP Example]

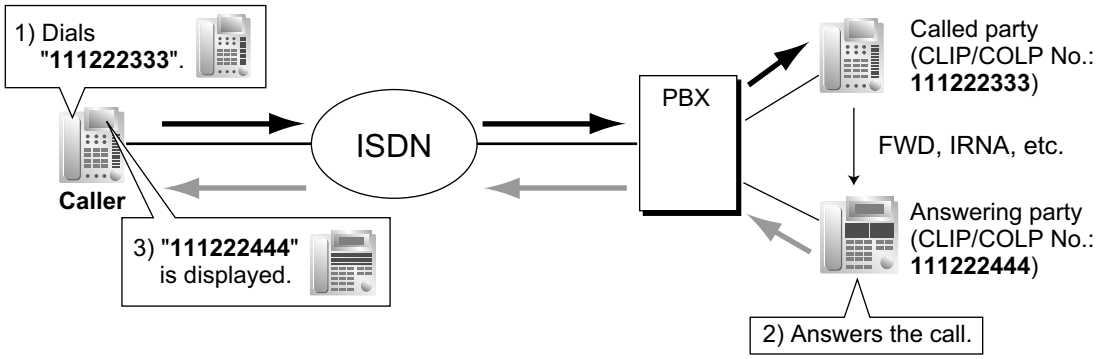

CLIP/COLP Number:

The telephone numbers sent to the network for CLIP/COLP can be assigned as follows:

- CLIP/COLP number for each ISDN port (subscriber's number).
- CLIP/COLP number for each extension.
- CLIP/COLP number for each incoming call distribution group.

Each extension can select either the CLIP/COLP number for the ISDN port or the extension to be used. The CLIP/COLP number for the ICD group is used when making a call by pressing the ICD Group button or receiving a call which arrives at the ICD Group button.

Calling Line Identification Restriction (CLIR) and Connected Line Identification Restriction (COLR)

It is possible for each extension to prevent the sending of its telephone number to the network by pressing the CLIR button, COLR button or entering the feature number.

Conditions

- The availability of this feature is dependent on the contract with the telephone company.
- The CLIP/COLP number for the connected ISDN port can be used for the ISDN terminal devices which cannot be assigned their own CLIP/COLP number, such as a doorphone.
- **COLP/CLIR/COLR Assignment for Each Port**
  Each service can be enabled or disabled on each ISDN port of the PBX.
- **CLIR Button and COLR Button**
  It is possible to switch between CLIP and CLIR by pressing the CLIR button, and COLP and COLR by pressing the COLR button. A flexible button can be customized as the CLIR or COLR button.
- The CLIP/COLP number must match the telephone number provided by the telephone company. Otherwise it will be ignored or replaced by another number.
- When using a private network, the extension number assigned for each extension through system programming is sent for CLIP/COLP. (→ 13.1.23 Private Network Features—QSIG—CLIP/COLP (Calling/Connected Line Identification Presentation) and CNIP/CONP (Calling/Connected Name Identification Presentation))
- When forwarding calls to a CO line, system programming selects whether the CLIP number of the calling party or of the forwarding extension is sent to the forward destination.
  However, if the call is transferred to another PBX via a private network from a VPS, the CLIP number of the calling party is always sent, regardless of system programming.
- When a call is placed on the network (including a private network), "0" or "00" may be deleted from the CLIP information sent to the network, depending on system programming.

PC Programming Manual References

3.33 [1-1] Slot—Port Property - PRI Port
→CO Setting—◆ Subscriber Number
→Supplementary Service—◆ COLP, CLIR, COLR, CNIP, CONP, CNIR, CONR, CF (Rerouting), CT, CCBS, E911
3.36 [1-1] Slot—Port Property - T1 Port—◆ Subscriber Number
4.9 [2-6-1] Numbering Plan—Main—Features
→◆ COLR Set / Cancel
→◆ CLIR Set / Cancel
→◆ Switch CLIP of CO Line / Extension
4.18 [2-9] System Options—Option 4
→◆ Send CLIP of CO Caller—when call is transferred to CO (CLIP of Held Party)
→◆ Send CLIP of CO Caller—when call is forwarded to CO
4.18 [2-9] System Options—Option 7
→◆ CLIP Modification (Outgoing)—"0" Delete from CLIP
→◆ CLIP Modification (Outgoing)—"00" Delete from CLIP
5.12 [3-5-1] Incoming Call Distribution Group—Group Settings—Main—◆ CLIP on G-DN Button
6.1 [4-1-1] Wired Extension—Extension Settings
→Main—◆ Extension Number
→ISDN CLIP—◆ CLIP ID
→ISDN CLIP—◆ CLIP on Extension/CO
→ISDN CLIP—◆ CLIR
→ISDN CLIP—◆ COLR
6.5 [4-1-4] Wired Extension—Flexible Button—◆ Type
6.10 [4-2-1] Portable Station—Extension Settings
→ISDN CLIP—◆ CLIP ID
→ISDN CLIP—◆ CLIP on Extension/CO
→ISDN CLIP—◆ CLIR
→ISDN CLIP—◆ COLR
6.13 [4-2-3] Portable Station—Flexible Button—◆ Type
6.18 [4-3] DSS Console—◆ Type

PT Programming Manual References

[003] Extension Number
[606] CLIP Number

Feature Manual References

6.1.3 Flexible Buttons

Operating Manual References

1.3.53 Private Network Features—CLIP (Calling Line Identification Presentation)
1.3.54 Private Network Features—CLIR (Calling Line Identification Restriction)
1.3.56 Private Network Features—COLR (Connected Line Identification Restriction)

3.1.17 CO Line Access

Description

There are three methods of accessing a CO line.

Method	Description	Operation
Idle Line Access (Local Access)	Selects an idle CO line automatically from the assigned trunk groups.	Dial the Idle Line Access number or press a L-CO button.
Trunk Group Access	Selects an idle CO line from the corresponding trunk group.	Dial the Trunk Group Access number and a trunk group number, or press a G-CO button.
S-CO Line Access	Selects the desired CO line directly.	Dial the S-CO Line Access number and the CO line number, or press the S-CO button.

Conditions

- Class of Service (COS) programming determines the trunk groups available for making calls.
- CO Line numbers can be referred on a CO line port basis.
- **Button Assignment**
  A flexible button can be customized as a G-CO, L-CO, or S-CO button as follows:

Type	Assignable parameter
Loop-CO (L-CO)	Any trunk group that is made available for Idle Line Access through system programming is applied.
Group-CO (G-CO)	A trunk group is assigned.
Single-CO (S-CO)	A specified CO line is assigned.

  It is possible to assign:
  – the same CO line to the S-CO button and to a G-CO button.
  – the same trunk group to more than one G-CO button.
  – more than one L-CO button.

  Dialing the CO Line Access number selects a CO button according to the following priority: S-CO → G-CO → L-CO
- **Direct CO Line Access**
  If an extension user is on-hook when pressing an idle CO button, the proprietary telephone (PT) automatically enables hands-free operation mode. The user can dial without lifting the handset or pressing the SP-PHONE button or MONITOR button.
- **Group Hunting Order for Idle Line Access**
  An idle CO line is selected from the trunk groups assigned for Idle Line Access. If multiple trunk groups are available, the trunk group hunting sequence can be determined through system programming.
- **CO Line Hunting Order for Idle Line Access and Trunk Group Access**
  The CO line hunting sequence in a trunk group (from lowest numbered CO line, from highest numbered CO line or rotation) can be determined through system programming.
- A company name or customer name can be assigned on a CO line port basis so that the operator or extension user who is answering the call can view the destination which the caller is trying to reach before answering. This is useful, for example, when multiple companies share the same operator.
- It is possible to identify the CO line port that has a CO line connected to it. This prevents extension users from originating a call to a CO line which is not connected.

PC Programming Manual References

3.24 [1-1] Slot—Port Property - Extension Port—◆ Connection
3.30 [1-1] Slot—Port Property - LCO Port—◆ Connection
3.33 [1-1] Slot—Port Property - PRI Port—◆ Connection
3.36 [1-1] Slot—Port Property - T1 Port—◆ Connection
3.39 [1-1] Slot—Port Property - IP-GW Port (KX-TDE series only)—◆ Connection
3.43 [1-1] Slot—Port Property - IP-Extension Port (KX-TDE series only)—◆ Connection
4.9 [2-6-1] Numbering Plan—Main—Features
→◆ Idle Line Access (Local Access)
→◆ Trunk Group Access
→◆ Single CO Line Access
4.13 [2-7-2] Class of Service—External Call Block
5.1 [3-1-1] Trunk Group—TRG Settings—Main—◆ Line Hunting Order
5.2 [3-1-2] Trunk Group—Local Access Priority
6.5 [4-1-4] Wired Extension—Flexible Button
→◆ Type
→◆ Parameter Selection (for Single CO)
→◆ Parameter Selection (for Group CO)
6.13 [4-2-3] Portable Station—Flexible Button
→◆ Type
→◆ Parameter Selection (for Single CO)
→◆ Parameter Selection (for Group CO)
6.18 [4-3] DSS Console
→◆ Type
→◆ Parameter Selection (for Single CO)
→◆ Parameter Selection (for Group CO)
10.1 [8-1] System Setting—◆ ARS Mode
12.1 [10-1] CO Line Settings—◆ CO Name

PT Programming Manual References

[400] LCOT CO Line Connection
[401] LCOT CO Line Name
[409] LCOT CO Line Number Reference
[500] Trunk Group Number

Feature Manual References

3.1.23 COS (Class of Service)
6.1.3 Flexible Buttons

Operating Manual References

1.2.1 Making Calls

3.1.18 CO Line Call Limitation

Description

CO line calls are limited by the following features:

Feature	Description
Extension-to-CO Line Call Duration	If a call between an extension user and an outside party is established, the call duration can be restricted by the system timer selected for each trunk group. Both parties will hear warning tones at five-second intervals starting 15 seconds before the time limit. When the time limit expires, the line will be disconnected. COS programming determines whether this feature is enabled or disabled. Whether this feature applies to outgoing calls only, or to both outgoing and incoming calls is determined through system programming.
CO-to-CO Line Call (except Unattended Conference Call) Duration	If a call between two outside parties is established, the call duration can be restricted by the system timer selected for each trunk group. Both parties will hear warning tones at five-second intervals starting 15 seconds before the time limit. When the time limit expires, the line will be disconnected. If both parties involved in the CO-to-CO line call were established by an extension (e.g., an extension makes a CO line call, then transfers the call to an outside party), the time limit applied to the CO line call that was made first will be used.
Dialing Digit Restriction during Conversation	While engaged in an incoming CO line call, the dialing of digits can be restricted. If the number of dialed digits exceeds the limitation, the line will be disconnected.

Conditions

- During an Unattended Conference Call, the Unattended Conference Recall time is applied. (→ 3.1.19 Conference)
- When using LCO lines that do not support Calling Party Control (CPC) signal detection (→ 3.1.24 CPC (Calling Party Control) Signal Detection), the CO-to-CO Line Call Duration timer should not be disabled, as automatic end of call detection cannot be performed.

PC Programming Manual References

4.12 [2-7-1] Class of Service—COS Settings—CO & SMDR—◆ Extension-CO Line Call Duration Limit
4.18 [2-9] System Options—Option 2—◆ Extension - CO Call Limitation—For Incoming Call
5.1 [3-1-1] Trunk Group—TRG Settings—Main
→◆ CO-CO Duration Time (*60s)
→◆ Extension-CO Duration Time (*60s)
9.5 [7-5] Miscellaneous—◆ Dial Digits Limitation After Answering—Dial Digits

PT Programming Manual References

[472] Extension-to-CO Line Call Duration
[473] CO-to-CO Line Call Duration
[502] CO Line Call Duration Limitation

Feature Manual References

3.1.23 COS (Class of Service)

3.1.19 Conference

Description

An extension user can establish a conference call by adding additional parties to an already existing two-party conversation. This PBX supports three-party through eight-party conference calls. Conferences with more than four parties are only possible when a PT or PS user originates the conference.

Unattended Conference:

The conference originator can leave the conference and allow other parties to continue. Establishing an Unattended Conference allows the originator to return to the conference. Unattended Conferences can only be established by PT and PS users.

Conditions

- When an extension is establishing a conference call the original party is put on hold.
- **CONF (Conference) Button**
  For a PT/PS which does not have the CONF button, a flexible button can be customized as the Conference button.
- **Unattended Conference Call Duration**
  The length of time that a conference call can remain unattended is restricted by the following timers:
  – Callback Start Timer
  – Warning Tone Start Timer
  – Disconnect Timer
  These timers behave and operate according to the following chain of events:
  1. When the unattended conference is established, the Callback Start Timer will begin.
  2. When the Callback Start timer expires, the Unattended Conference originator's extension will start to receive a callback ringing from the PBX and the Warning Tone Start Timer begins.
  3. When the Warning Tone Start Timer expires, the remaining parties of the conference will start to hear a warning tone, the callback ringing will continue to be heard at the Unattended Conference originator's extension, and the Disconnect Timer begins.
  4. When the disconnect Timer expires, the conference is disconnected.

  If the Unattended Conference originator returns to the conference before the line is disconnected, all timers are cleared.
- If the originator of a conference with two CO lines leaves the conference, the call can become a CO-to-CO line call, if enabled through system programming.
  – When a CO-to-CO line call is established, the call will end when the CO-to-CO Line Call Duration timer has elapsed (→ 3.1.18 CO Line Call Limitation). The timer applied is that of the trunk group containing the CO line being used for the call immediately preceding the conference. The timer cannot be extended.
  – If both CO lines are analog CO lines, the end of the CO-to-CO line call may not be detected. For this reason, if analog CO lines are used, it is not recommended to enable the establishment of CO-to-CO line calls after a conference call through system programming.
- **For a Conference With Six or More Parties**
  The EECHO or ECHO card is required. Also the echo canceling function should be enabled through system programming.

Installation Manual References

KX-NCP500/KX-NCP1000

3.7.4 ECHO16 Card (KX-TDA0166)

KX-TDE100/KX-TDE200

3.7.4 ECHO16 Card (KX-TDA0166)

KX-TDE600

3.9.6 EECHO16 Card (KX-TDA6166)

PC Programming Manual References

4.5 [2-3] Timers & Counters—DISA / Door / Reminder / U. Conf
→◆ Unattended Conference—Recall Start Timer
→◆ Unattended Conference—Warning Tone Start Timer
→◆ Unattended Conference—Disconnect Timer
4.12 [2-7-1] Class of Service—COS Settings—CO & SMDR—◆ Transfer to CO
4.18 [2-9] System Options—Option 2—◆ CO - CO Call Limitation—After Conference
4.18 [2-9] System Options—Option 3
→◆ Confirmation Tone—Tone 4-1 : Start Conference
→◆ Confirmation Tone—Tone 4-2 : Finish Conference
→◆ Echo Cancel—Conference
6.5 [4-1-4] Wired Extension—Flexible Button—◆ Type
6.13 [4-2-3] Portable Station—Flexible Button—◆ Type
6.18 [4-3] DSS Console—◆ Type

Feature Manual References

6.1.3 Flexible Buttons
21.1 Capacity of System Resources

Operating Manual References

1.3.15 Conference

3.1.20 Conference Group Call

Description

Conference group calling allows you to call a pre-determined group (conference group) of parties simultaneously. Each party that answers the call joins the conference.
An extension user can call a conference group of up to 7 parties to establish a conference call, for a maximum of 8 participants. During a conference group call, the caller can restrict the ability of other members to speak.
The following telephones will answer automatically and play the announcement through the telephone's speaker, even if Hands-free Answerback (→ 8.1.1 Hands-free Answerback) is not enabled for the extension:

- PTs
- KX-WT125 (PS)
- KX-WT126 (PS)
- KX-TCA185 (PS)
- KX-TCA285 (PS)
- KX-TCA385 (PS)

Broadcast Mode

When Broadcast Mode is enabled through system programming, an extension user can call a conference group of up to 31 call members to make a voice announcement. Members can listen to the announcement by answering the call.
During the announcement, the voices of members will not be heard. However, the caller can allow up to 7 specific members to speak, making a conference call. This conversation can be heard by the other members.

[Push-to-talk feature]
Members of a Broadcast Mode call can enable their own ability to speak by pressing any of their dial keys during the Broadcast Mode announcement. This feature can be disabled through system programming.
[Example]
A central operator can make a Broadcast Mode announcement to multiple PS users working throughout a building. All the PS users will hear the announcement through their PSs' hands-free speaker. Then, any PS user can use push-to-talk to respond to the request, and the response is heard by all broadcast members. This makes it easy to assign and coordinate tasks with multiple staff members who frequently move throughout a building.

Conference Group Call Control

During a conference group call, the caller can restrict or allow members' ability to speak, and can remove members from the call using the following buttons. These buttons will function irrelevant of the Conference Group Call mode. Pressing the other buttons during the conversation will be ignored.

Note

The operation of these buttons during a conference group call is different from the operations for the Conference feature (→ 3.1.19 Conference).

Button	Function
DSS	Disables or enables the corresponding member's ability to speak.
CONF (Conference)	Establishes a conversation with the current members in the order assigned in the conference group. Pressing this button again will add the next available member in the group to the conversation.
TRANSFER	Removes the member who joined the conversation last. The member can still listen to the announcement.
FLASH/RECALL (Flash/Recall mode)	Removes the member who joined the conversation last. The member will be disconnected from the conference group call and hear a reorder tone.
SP-PHONE	Enables a hands-free conversation.

A member extension can inform the caller that he wants to speak or join the conversation by sending a notification. The caller will hear a notification tone and the requesting extension's information will be shown on the display for five seconds.

Conference Groups

Eight conference groups can be programmed, and a maximum of 7 members (31 members in Broadcast Mode) can be assigned to each group. The available destinations as members of the conference group are as follows:

Destination	Availability
Wired Extension (PT/SLT/SIP Extension/T1-OPX)	✓
PS	✓
ICD Group	
PS Ring Group	
Floating Extension no. for SVM	
VM Group (DTMF/DPT)	
External Pager (TAFAS)	

Destination	Availability
DISA	
Analog/ISDN Remote Maintenance	
Idle Line Access no. + Phone no.	✓
Trunk Group Access no. + Trunk Group no. + Phone no.	✓
Extension of Another PBX (via TIE Line, Access with PBX Code)	✓*1
Extension of Another PBX (via TIE Line, Access without PBX Code)	✓*1

*1 Only available when the networking type of the CO line is assigned as private.

Join After Time Out

When conference group members do not answer a conference group call within the preprogrammed time limit, the member's telephones will stop ringing. However, even after the time limit has expired, members can join the conference.
Additionally, extension users not registered in the called conference group can join a conference after it has started. Outside callers using DISA and TIE line users can also join a conference after accessing their extension using Walking COS.
An entry code can also be specified to restrict access to the call. The entry code can be set when the caller initiates the conference group call. If an entry code is to be set, usually the caller will inform call participants in advance.
[Starting a Conference Group Call using Hands-free Answerback]
Hands-free Answerback can be enabled for conference group member extensions. By initiating a conference group call with a conference group that includes an extension that has Hands-free Answerback (→ 8.1.1 Hands-free Answerback) enabled, such as a softphone, the call can be automatically answered and the conference begins with only one participant (the initiator of the conference group call). Then, up to 6 participants can use Join After Time Out to join the conference. For example, a manager can organize a meeting where all the members are calling from cellular phones and use Join After Time Out to join the conference.

Conditions

- Automatic answering for PTs and PSs can be enabled or disabled for each conference group.
- Only PTs, PSs, and SLTs that are permitted by COS programming can originate conference group calls.
- Conference Group Call Control features are unavailable if an SLT is used to initiate the call.
- Users of PSs other than the KX-WT125/KX-WT126/KX-TCA185/KX-TCA285/KX-TCA385 may be able to enable the automatic answering of calls for this feature by changing their PSs' settings. For details, refer to the operating instructions of the PS.
- After one conference group member answers the call, the conference or announcement is established.
- If no members answer the call within the preprogrammed time limit, the caller will hear a busy tone.
- The caller will hear a confirmation tone every time a member answers the call.
- When the originating caller of a conference group call goes on-hook, the call ends and all participating members will be disconnected.
- The conference group call will reach a member extension regardless of settings such as Call Forwarding (except DND).
- If a member extension is busy and has Call Waiting for CO line calls activated when a conference group call is made, a call waiting tone will be sent to the extension.
- For members who use a KX-WT125/KX-WT126/KX-TCA185/KX-TCA285/KX-TCA385 PS, when automatic answer is enabled for the conference group and the extension is busy when a conference group call is made, the PS will automatically answer the call if the member goes on-hook while the conference call is still ringing. A PT will ring instead of answering the call.

- The call information of the caller (not members) will be recorded on SMDR.
- A caller cannot make a conference group call with a call on hold.
- Call Pickup is not available for a conference group call. (→ 3.1.9 Call Pickup)
- The conference group call will not reach members when:
  – the member extension has set DND for intercom calls.
  – the member extension is a PS in Wireless XDP Parallel Mode. (→ 20.1.5 Wireless XDP Parallel Mode)
- If a conversation has reached the maximum number of participants, the Join After Time Out feature cannot be used to join the conversation.
- If 7 members of a Broadcast Mode call already have the ability to speak enabled, other users cannot use the push-to-talk feature.
- If a member uses push-to-talk to enable the ability to speak during a Broadcast Mode call, the member cannot disable this ability. They can mute their microphone manually, or the originator of the call can use conference group call control to disable their ability to speak.
- Since each PS requires one wireless channel, note your PBX's wireless capacity when assigning multiple PSs to a conference group.
- **For a Conference Group Call in Broadcast Mode with Five or More Parties**
  The EECHO or ECHO card is required. Also the echo canceling function should be enabled through system programming.

Installation Manual References

KX-NCP500/KX-NCP1000

3.7.4 ECHO16 Card (KX-TDA0166)

KX-TDE100/KX-TDE200

3.7.4 ECHO16 Card (KX-TDA0166)

KX-TDE600

3.9.6 EECHO16 Card (KX-TDA6166)

PC Programming Manual References

4.5 [2-3] Timers & Counters—Miscellaneous—◆ Conference Group Call—Ring Duration
4.9 [2-6-1] Numbering Plan—Main—Features—◆ Conference Group Call Operation
4.12 [2-7-1] Class of Service—COS Settings—Miscellaneous—◆ Conference Group Call Operation
4.18 [2-9] System Options—Option 3—◆ Echo Cancel—Conference
5.26 [3-10] Conference Group
→◆ Broadcast Mode
→◆ Ability to Talk
5.27 [3-10] Conference Group—Member List

Feature Manual References

8.1.1 Hands-free Answerback
21.1 Capacity of System Resources

Operating Manual References

1.3.17 Conference Group Call

3.1.21 Confirmation Tone

Description

At the end of feature operations, the PBX confirms the success of the operation by sending a confirmation tone to extension users.

Type	Description
Tone 1	**a.** Sent when the setting is accepted. **b.** Sent when a call is received in voice-calling mode (Alternate Receiving—Ring/Voice). The caller's voice will be heard after the tone.
Tone 2	**a.** Sent from an external paging device or an extension before being paged. **b.** Sent when a call is received while an extension is in Hands-free Answerback mode.
Tone 3-1	**a.** Sent before a conversation is established when using the Paging feature. **b.** Sent to the caller when a conversation is established with an extension in one of the following modes: • Hands-free Answerback mode • Voice-calling mode (Alternate Receiving—Ring/Voice) **c.** Sent when making a call to or from a doorphone.
Tone 3-2	Sent before a conversation is established when accessing the following features by the feature numbers: • Call Park Retrieve • Call Pickup • Hold Retrieve • Paging Answer • Trunk Answer From Any Station (TAFAS)
Tone 4-1	Sent when a call changes from a two-party call to a three-party call (e.g., Executive Busy Override, Conference, Privacy Release, Two-way Record).
Tone 4-2	Sent when a call changes from a three-party call to a two-party call (e.g., Executive Busy Override, Conference, Privacy Release, Two-way Record).
Tone 5	Sent when a call is placed on hold (including a consultation hold).

Conditions

- **Confirmation Tone Patterns**
  All confirmation tone patterns have a default (→ 21.2 Tones/Ring Tones).
- It is possible to eliminate each tone.

PC Programming Manual References

4.18 [2-9] System Options—Option 3
→◆ Confirmation Tone—Tone 1 : Called by Voice
→◆ Confirmation Tone—Tone 2 : Paged / Automatic Answer
→◆ Confirmation Tone—Tone 3-1 : Start Talking after Making Call / Call from Doorphone
→◆ Confirmation Tone—Tone 3-2 : Start Talking after Answering Call
→◆ Confirmation Tone—Tone 4-1 : Start Conference
→◆ Confirmation Tone—Tone 4-2 : Finish Conference

→◆ Confirmation Tone—Tone 5 : Hold

3.1.22 Consultation Hold

Description

Consultation Hold is a condition that a party is in, when an extension is calling other parties in order to perform Call Transfer, Conference, or Call Splitting. When the operation is completed or canceled, the consultation hold is released.
In Consultation Hold, the original call is treated as if it is on hold, allowing the extension to call a third party all on one line. In Call Hold, the party on hold and the third party are connected to the extension using separate lines.

Feature Manual References

3.1.10 Call Splitting
3.1.11 Call Transfer
3.1.19 Conference

3.1.23 COS (Class of Service)

Description

Each extension must belong to a Class of Service (COS). By assigning certain extensions to a COS, it is possible to control the behavior and privileges of extension users (allowing or denying certain extensions access to various features, extensions, and CO lines) depending on the duties appointed to them.
Many extensions can belong to the same COS by assigning each extension the same COS number, allowing the same restrictions and privileges to apply to a group of extensions.
The following features are controlled on a COS basis:

a. → 9.1.14 Internal Call Block
b. → 6.1.6 FWD (Call Forwarding)
c. → 4.1.10 DND (Do Not Disturb)—DND Override
d. → 3.1.9 Call Pickup
e. → 1.1.2 Account Code Entry
f. → 3.1.17 CO Line Access
g. → 5.1.3 Executive Busy Override
h. → 3.1.7 Call Monitor
i. → 12.1.3 OHCA (Off-hook Call Announcement)
j. → 20.1.4 Whisper OHCA
k. → 17.1.6 TRS (Toll Restriction)
l. → 5.1.4 Extension Dial Lock
m. → 20.1.1 Walking COS
n. → 3.1.18 CO Line Call Limitation
o. → 3.1.11 Call Transfer
p. → 4.1.11 Door Open
q. → 4.1.8 DISA (Direct Inward System Access)
r. → 20.1.5 Wireless XDP Parallel Mode
s. → 16.1.4 SMDR (Station Message Detail Recording)—SMDR for Outgoing CO Line Calls
t. → 17.1.5 Time Service—Time Service Switching
u. → 11.1.1 Manager Features
v. → 13.1.32 PT Programming

w. → 13.1.7 PDN (Primary Directory Number)/SDN (Secondary Directory Number) Extension—SDN Key mode, SDN Walking COS, and assigning SDN buttons through PT programming

Conditions

- **Walking COS**
  Extension users can make a call from extensions of a less-privileged COS by using their own COS temporarily. (→ 20.1.1 Walking COS)

PC Programming Manual References

4.12 [2-7-1] Class of Service—COS Settings
6.1 [4-1-1] Wired Extension—Extension Settings—Main—◆ COS
6.10 [4-2-1] Portable Station—Extension Settings—Main—◆ COS

PT Programming Manual References

2.1.8 COS Programming
[602] Class of Service

Feature Manual References

21.1 Capacity of System Resources

3.1.24 CPC (Calling Party Control) Signal Detection

Description

The Calling Party Control (CPC) signal is an on-hook indication (disconnect signal) sent from an analog CO line when the other party hangs up. To maintain efficient utilization of CO lines, the PBX monitors each line's status and when CPC signal is detected on a line, the PBX disconnects the line and alerts the extension with a reorder tone.

Conditions

- CPC signal detection is programmable for incoming CO line calls, and for outgoing CO line calls.
- If your telephone company sends signals similar to CPC, it is recommended not to enable CPC signal detection on outgoing CO line calls.
- If CPC signal is detected during a conference call (→ 3.1.19 Conference), the line is disconnected. The remaining parties stay connected.
- If CPC signal is detected during a call between a caller using the Direct Inward System Access (DISA) feature (→ 4.1.8 DISA (Direct Inward System Access)) and an extension or an outside party, the line is disconnected.

PC Programming Manual References

3.30 [1-1] Slot—Port Property - LCO Port—◆ CPC Signal Detection Time—Outgoing, Incoming
3.36 [1-1] Slot—Port Property - T1 Port
→◆ CPC Signal Detection (DID)—Outgoing, Incoming
→◆ CPC Signal Detection (LCO/GCO)—Outgoing, Incoming

PT Programming Manual References

[413] LCOT CPC Signal Detection Time—Outgoing
[414] LCOT CPC Signal Detection Time—Incoming

3.1.25 CTI (Computer Telephony Integration)

Description

The PBX supports a CTI interface using the LAN port of the MPR card. The CTI interface allows extension users to make or receive calls with advanced features:

– Extension users can make calls easily from a phone book in their PC.
– When an extension user receives an incoming call, detailed caller information can be displayed on the PC automatically.

A PC and CTI server application software, such as Panasonic Communication Assistant (CA), are required to use CTI features. The PC running the application monitors the status of the PBX and controls the PBX via the CTI Server.

[Example]

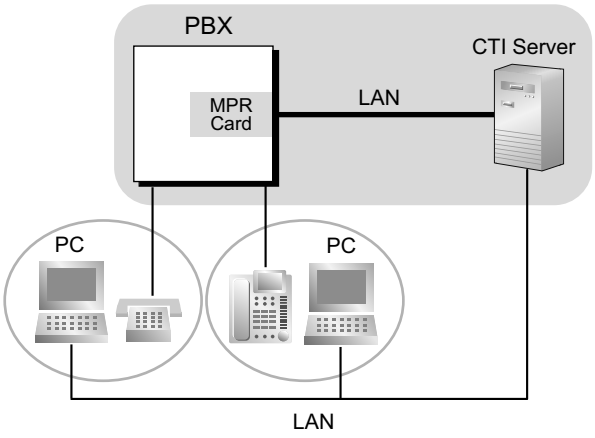

Conditions

- CTI application software must be installed on the connected PC. In addition, some features may require a KX-NCS3910, KX-NCS4910 or KX-NCS4950 (Activation Key for Software Upgrade to Enhanced Version).
- CTI Call control is not supported for SIP extensions.
  For example, a SIP extension user cannot make or transfer a call using a CTI application.
- **Application Programming Interface (API)/Protocol**

Type	API/Protocol
Third Party Call Control	• ECMA CSTA Phase 3 • TAPI 2.1

- Only one CTI server can connect to the PBX at a time.
- For details about specific CTI features, refer to the manual for your CTI application software.
  When you use the Panasonic TSP, refer to "1. Before Installing" of the KX-Series TSP Installation Manual.

Installation Manual References

KX-NCP500/KX-NCP1000

3.3.1 IPCMPR Card
3.8.4 First Party Call Control CTI Connection
3.10.1 Connection of Peripherals

KX-TDE100/KX-TDE200

3.3.1 IPCMPR Card
3.8.4 First Party Call Control CTI Connection
3.10.1 Connection of Peripherals

KX-TDE600

3.3.1 IPCEMPR Card
3.10.4 First Party Call Control CTI Connection
3.12.1 Connection of Peripherals

PC Programming Manual References

4.9 [2-6-1] Numbering Plan—Main—Features—◆ Dial Information (CTI)
4.18 [2-9] System Options—Option 6 (CTI)

Section 4

Features and Configurations—D

4.1 D

4.1.1 Data Line Security

Description

Once Data Line Security is set on an extension, communication between the extension and the other party is protected from signals such as Call Waiting, Hold Recall and Executive Busy Override. Extensions which have devices connected to them such as modems or fax machines may set this feature to maintain secure data transmission, by blocking tones or other interruptions during communication.

PC Programming Manual References

4.9 [2-6-1] Numbering Plan—Main—Features—◆ Data Line Security Set / Cancel
6.1 [4-1-1] Wired Extension—Extension Settings—Option 2—◆ Data Mode

Operating Manual References

1.3.18 Data Line Security

4.1.2 DHCP (Dynamic Host Configuration Protocol) Assignment

Description

It is possible to assign this PBX as a DHCP client, allowing IP addresses to be received from a DHCP server over a LAN.

Conditions

- It is possible to enable this feature through system programming.

Notice

It is important to set your DHCP server to not change the IP addresses of the MPR and DSP cards once IP telephones are registered to the PBX. The IP telephones will not operate properly if these IP addresses are changed.

PC Programming Manual References

3.4 [1-1] Slot—Card Property - IPCMPR (for KX-NCP500/KX-NCP1000/KX-TDE100/KX-TDE200)/IPCEMPR (for KX-TDE600)—LAN Setting
→◆ DHCP Client
→◆ IP Address for IPCMPR Card (for KX-NCP500/KX-NCP1000/KX-TDE100/KX-TDE200)/IP Address for IPCEMPR Card (for KX-TDE600)
→◆ IP Address for VoIP-DSP

4.1.3 Dial Mode Selection

Description

The dialing mode (rotary or tone) can be selected for each analog CO line through system programming regardless of the originating extension (under contract with the telephone company).

Mode	Description
DTMF (Dual Tone Multi-Frequency)	Numbers dialed by an extension user are transmitted to the CO line using analog tones.
Pulse Dial (Rotary)	Numbers dialed by an extension user are transmitted to the CO line using analog pulses.

Conditions

- **Pulse to Tone Conversion**
  It is possible for an extension user to temporarily switch from Pulse mode to DTMF mode in order to access special services such as computer-accessed long distance calling or voice mail services. To switch to DTMF mode, wait for a preprogrammed time period (Default: 5 seconds) after the CO line is connected, or press ✳. This feature works only on CO lines set to Pulse mode. DTMF mode cannot be changed to Pulse mode.
- It is possible to select a pulse rate for the CO line port which has been set to Pulse mode. There are two pulse rates: Low (10 pps) and High (20 pps).
- It is possible to assign the minimum duration of the DTMF signal sent to the CO line port which has been set to DTMF mode.

PC Programming Manual References

3.30 [1-1] Slot—Port Property - LCO Port
→◆ Dialing Mode
→◆ DTMF Width
→◆ Pulse Speed
3.36 [1-1] Slot—Port Property - T1 Port
→◆ CO Dial Mode
→◆ DTMF Width
→◆ CO Pulse Speed

PT Programming Manual References

[410] LCOT Dialing Mode
[411] LCOT Pulse Rate
[412] LCOT DTMF Minimum Duration

4.1.4 Dial Tone

Description

The following dial tones inform extension users about features activated on their extensions:
Each dial tone type has two frequencies, such as dial tone 1A and dial tone 1B.

Type	Description
Tone 1A/1B	A normal dial tone is heard when: **a.** No features listed for dial tones 2 through 4 has been set, or **b.** Automatic Route Selection (ARS) is used.

Tone 2A/2B	This tone is heard when:
	• There are messages that have previously been listened to and no new messages recorded by the Simplified Voice Message (SVM) feature.*1
	• Any of the features below are set.
	  • Absent Message
	  • BGM
	  • Call Forwarding (FWD)
	  • Call Pickup Deny
	  • Call Waiting
	  • Do Not Disturb (DND)
	  • Extension Dial Lock
	  • Executive Busy Override Deny
	  • Hot Line
	  • Timed Reminder

Tone 3A/3B	This tone is heard when:
	• A called PS is being searched for.
	• The recording time used by the Simplified Voice Message (SVM) feature reaches the limit.*1
	• Any of the features below are performed.
	  • Account Code Entry
	  • Consultation Hold
	  • Answering a Timed Reminder call with no message

Tone 4A/4B	This tone is heard when new messages have been recorded for the extension.

*1 Active even when distinctive dial tones are disabled.

Conditions

- **Dial Tone Type A/B**
  Through system programming, it is possible to select dial tone type A or B for dial tones 1 through 4. If "**Type A**" is selected, all dial tones 1 through 4 will become dial tone type A.
  The dial tone type for the ARS feature can be selected separately. If "**Type A**" is selected for ARS, dial tone 1A will be heard. If "**Type B**" is selected, dial tone 1B will be heard.
- **Distinctive Dial tone**
  Distinctive dial tones can be disabled. When disabled, dial tone 1 will be heard in all cases except those marked with "*1" in the table above.
- **Dial Tone Patterns**
  All dial tone patterns have a default (→ 21.2 Tones/Ring Tones).
- Only dial tone 1 is sent to the extensions in a VM (DPT/DTMF) group. (→ 19.1.3 Voice Mail (VM) Group)

PC Programming Manual References

4.18 [2-9] System Options—Option 3
→◆ Dial Tone—Distinctive Dial Tone

→◆ Dial Tone—Dial Tone for Extension
→◆ Dial Tone—Dial Tone for ARS

4.1.5 Dial Tone Transfer

Description

An extension assigned as the manager can change the TRS level (→ 17.1.6 TRS (Toll Restriction)) for an extension user temporarily. After that, the extension user can make his call.

[Example]
A hotel guest calls the front desk and asks for the telephone's toll restriction to be lifted in order to make an international call.

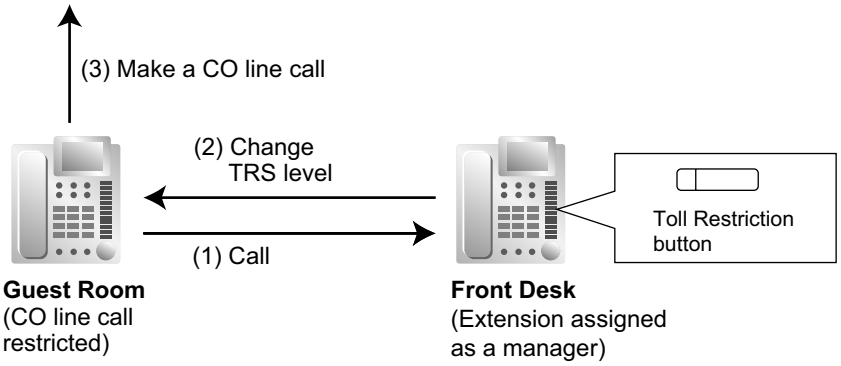

Conditions

- The modified TRS level only applies to the next one call placed at the user's extension.
- **Toll Restriction Button**
  A manager extension must store the TRS level granted by the Dial Tone Transfer beforehand, when assigning a flexible button as the Toll Restriction button.

PC Programming Manual References

6.5 [4-1-4] Wired Extension—Flexible Button
→◆ Type
→◆ Parameter Selection (for TRS Level Change)
6.13 [4-2-3] Portable Station—Flexible Button
→◆ Type
→◆ Parameter Selection (for TRS Level Change)
6.18 [4-3] DSS Console
→◆ Type
→◆ Parameter Selection (for TRS Level Change)

Feature Manual References

6.1.3 Flexible Buttons

Operating Manual References

2.1.1 Dial Tone Transfer

4.1.6 DID (Direct Inward Dialing)

Description

Directs a call on a public CO line assigned as a Direct Inward Dialing (DID) line to a preprogrammed destination according to the call's DID number, which is based on the telephone number dialed by the caller. When a call reaches its destination via DID distribution, the DID name will be displayed on the proprietary telephone (PT), allowing extension users to easily see whom a call is directed to. Each DID number has a destination for each time mode.

DID distribution allows you to use your telephone numbers for specific purposes. For example, you can direct calls from customers' fax machines to your office fax machine automatically, or allow your overseas customers to be automatically connected to specific operators. Incoming calls with DID numbers that match extension numbers at this PBX will be sent to the corresponding extension. Incoming calls with DID numbers that match extensions at other PBXs will be sent to the corresponding TIE line.

[Method Flowchart]

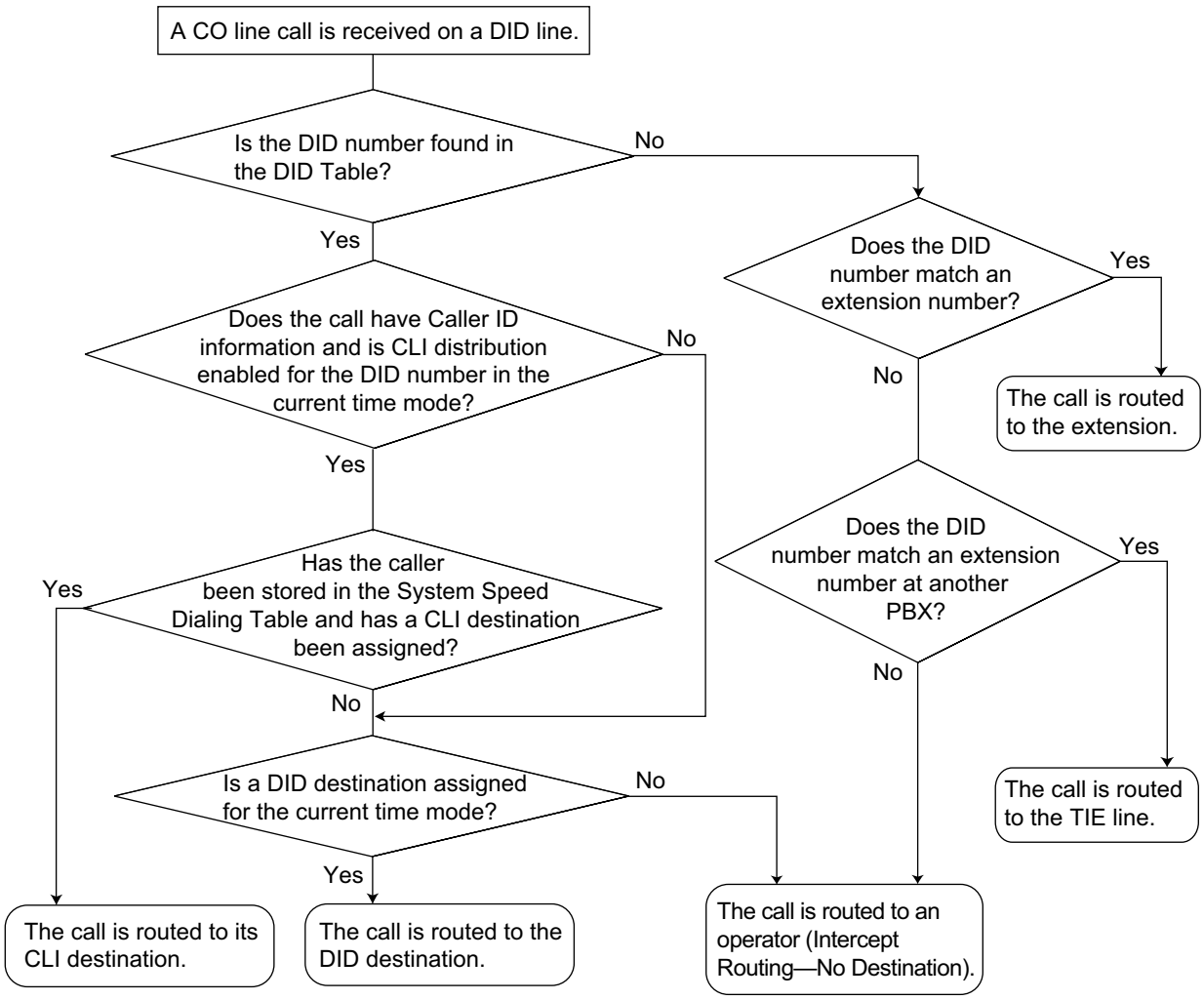

[Programming Example: DID Table]

Location	DID No.*1	DID Name*2	CLI Distribution*3				DID Destination*4			
			Day	Lunch	Break	Night	Day	Lunch	Break	Night
1	123-4567	Sales	Enable	Disable	Enable	Disable	105	100	105	100
2	123-2468	Judy	Enable	Disable	Disable	Disable	102	100	102	100

*1 → 12.3 [10-3] DID Table—◆ DID Number
→ [451] DID Number
*2 → 12.3 [10-3] DID Table—◆ DID Name
→ [452] DID Name
*3 → 12.3 [10-3] DID Table—◆ CLI Ring for DID—Day, Lunch, Break, Night
*4 → 12.3 [10-3] DID Table—◆ DID Destination—Day, Lunch, Break, Night
→ [453] DID Destination

In this example:
If the DID number is "123-4567":

1. The PBX looks for the DID number in the table and finds it in location 1.
2. The PBX checks the time mode.
   In day mode: Calling Line Identification (CLI) distribution is enabled. The call is routed to its CLI destination, if assigned. If not assigned, the call is routed to the DID destination, extension 105, and "Sales" is displayed.
   In lunch mode: CLI distribution is disabled. The call is routed to the DID destination, extension 100, and "Sales" is displayed.

Note

Tenant numbers and VM trunk group numbers (not shown here) can also be programmed in the DID Table.
The tenant number programmed here is used only to determine the Time Table used by each DID number; selecting tenant 3 means the DID number will use Time Table 3, for example. The VM trunk group number set here is used to determine the Incoming Call Service and greeting message used by the Voice Processing System (VPS) during the current time mode. (→ 19.1.4 Voice Mail DPT (Digital) Integration)

Conditions

- To use this feature, DID must be assigned as the distribution method for the desired CO line port.

PC Programming Manual References

4.5 [2-3] Timers & Counters—Miscellaneous—◆ Incoming Call Inter-digit Timer—DID
12.2 [10-2] DIL Table & Port Settings—DID/TIE
→◆ Distribution Method
→◆ DID/TIE—Remove Digit
→◆ DID/TIE—Additional Dial
12.3 [10-3] DID Table

PT Programming Manual References

[451] DID Number
[452] DID Name
[453] DID Destination

Feature Manual References

3.1.15 CLI (Calling Line Identification) Distribution
9.1.10 INCOMING CALL FEATURES
17.1.3 Tenant Service
17.1.5 Time Service
21.1 Capacity of System Resources

4.1.7 DIL (Direct In Line)

Description

Directs an incoming public CO line call to a preprogrammed destination based on the CO line carrying the call. Each CO line has a destination for each time mode.

[Method Flowchart]

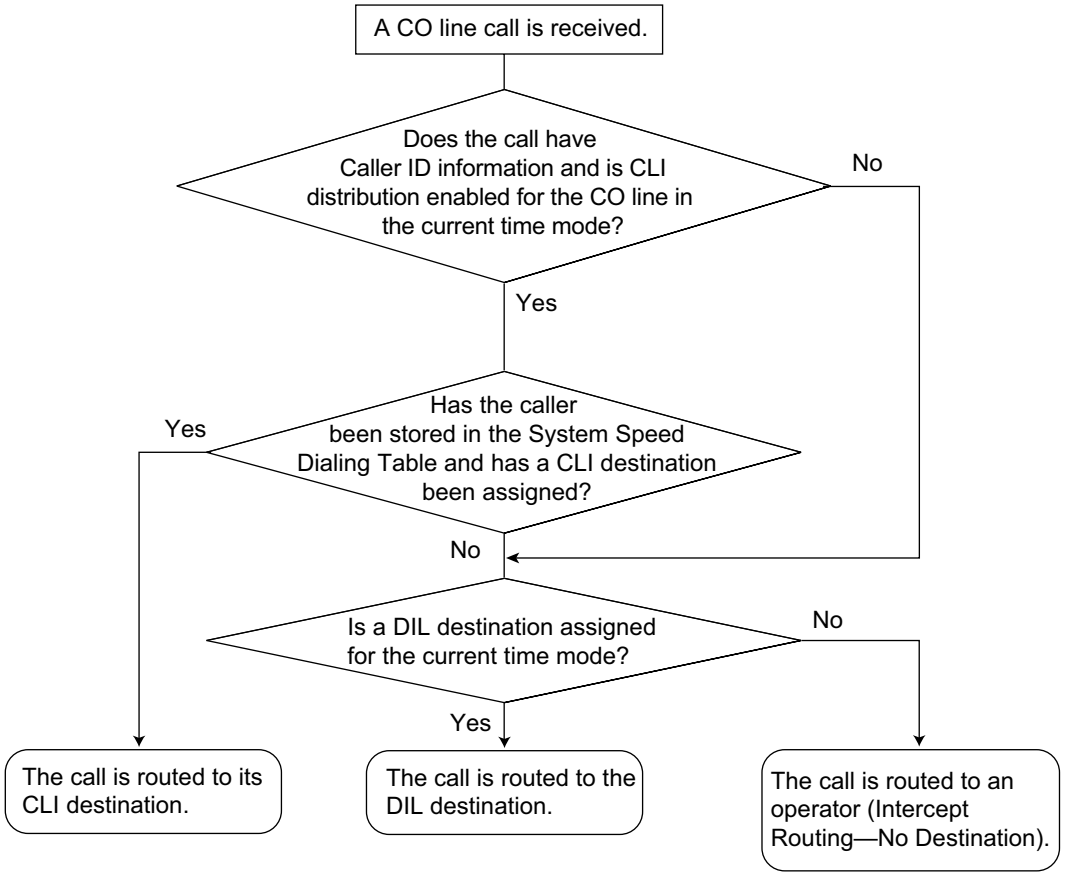

[Programming Example: DIL Table]

The table can be programmed for each CO line.

Port No. (CO Line No.)	CLI Distribution				DIL Destination*1			
	Day	Lunch	Break	Night	Day	Lunch	Break	Night
01	Enable	Disable	Enable	Disable	101	100	101	100
02	Enable	Disable	Disable	Disable	102	100	102	100

*1 → **12.2 [10-2] DIL Table & Port Settings—DIL—◆ DIL Destination—Day, Lunch, Break, Night**
→ [450] DIL 1:1 Destination

In this example:
If a CO line call is received on CO line 01:
In day mode: Calling Line Identification (CLI) distribution is enabled. The call is routed to its CLI destination, if assigned. If not assigned, the call is routed to the Direct In Line (DIL) destination, extension 101.
In lunch mode: CLI distribution is disabled. The call is routed to the DIL destination, extension 100.

Note

Tenant numbers and VM trunk group numbers (not shown here) can also be programmed in the DIL Table.
The tenant number programmed here is used only to determine the Time Table used by each CO line; selecting tenant 3 means the CO line will use Time Table 3, for example. The VM trunk group number set here is used to determine the Incoming Call Service and greeting message used by the Voice Processing System (VPS) during the current time mode. (19.1.4 Voice Mail DPT (Digital) Integration)

Conditions

- To use this feature, DIL must be assigned as the distribution method for the desired CO line port.

PC Programming Manual References

12.2 [10-2] DIL Table & Port Settings—DIL
→◆ DIL Destination—Day, Lunch, Break, Night
→◆ Tenant Number
→◆ VM Trunk Group No.

PT Programming Manual References

[450] DIL 1:1 Destination

Feature Manual References

3.1.15 CLI (Calling Line Identification) Distribution
9.1.10 INCOMING CALL FEATURES
17.1.5 Time Service

4.1.8 DISA (Direct Inward System Access)

Description

An outside caller can access specific PBX features as if the caller is an SLT extension user in the PBX, when the incoming call destination is a DISA floating extension number assigned to each DISA message. The caller can have direct access to features such as:

- Placing an intercom call to an extension, operator or any floating extensions (e.g., modem for remote system administration, an external pager for TAFAS).
- Calling an outside party via the PBX.
- Operating some PBX remote features (e.g., FWD).

[Flowchart]

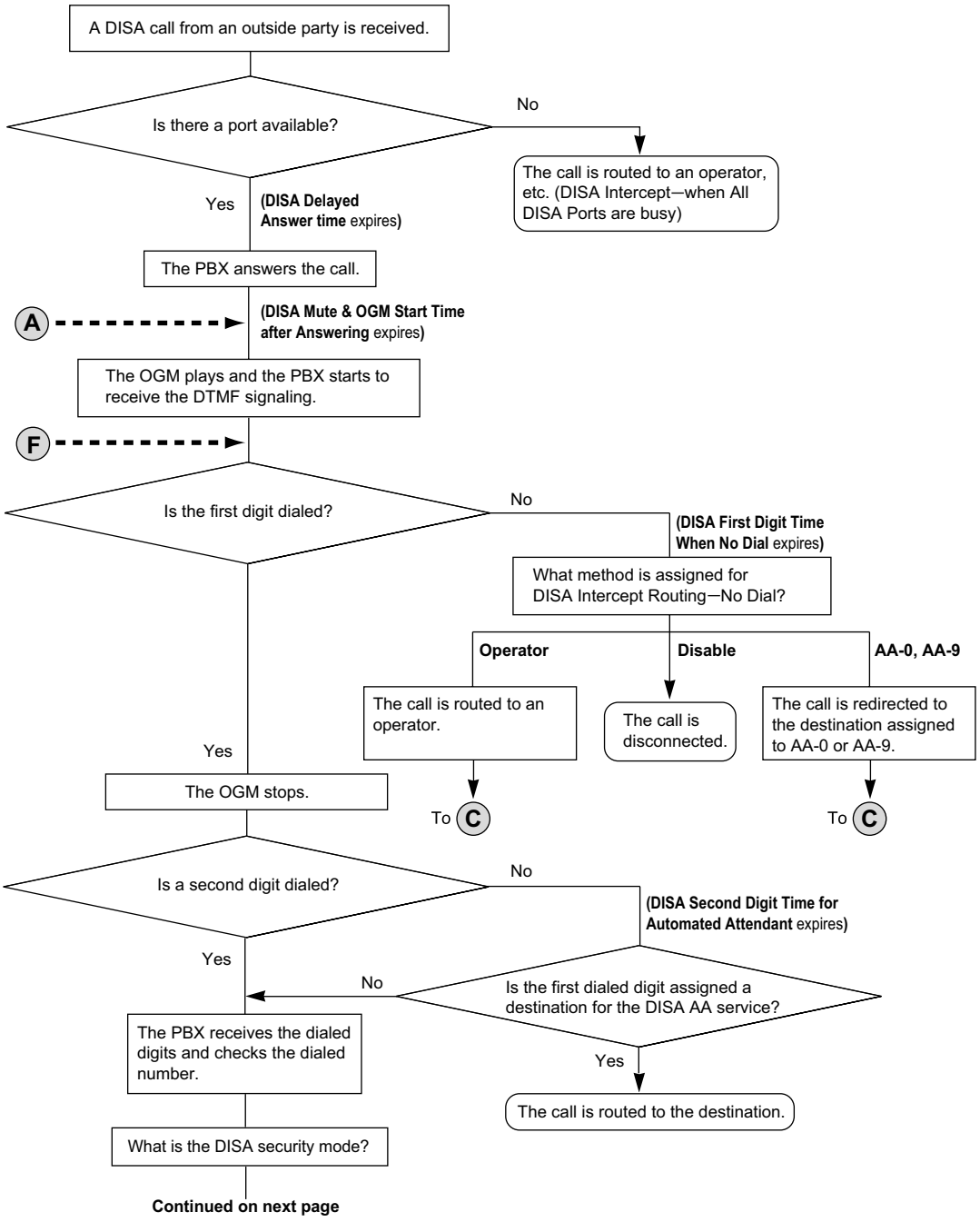
A DISA call from an outside party is received.
Is there a port available?
No
The call is routed to an operator, etc. (DISA Intercept—when All DISA Ports are busy)
Yes
(DISA Delayed Answer time expires)
The PBX answers the call.
A
(DISA Mute & OGM Start Time after Answering expires)
The OGM plays and the PBX starts to receive the DTMF signaling.
F
Is the first digit dialed?
No
(DISA First Digit Time When No Dial expires)
What method is assigned for DISA Intercept Routing—No Dial?
Operator
Disable
AA-0, AA-9
The call is routed to an operator.
The call is disconnected.
The call is redirected to the destination assigned to AA-0 or AA-9.
To C
To C
Yes
The OGM stops.
Is a second digit dialed?
No
(DISA Second Digit Time for Automated Attendant expires)
Yes
No
Is the first dialed digit assigned a destination for the DISA AA service?
Yes
The PBX receives the dialed digits and checks the dialed number.
The call is routed to the destination.
What is the DISA security mode?
Continued on next page

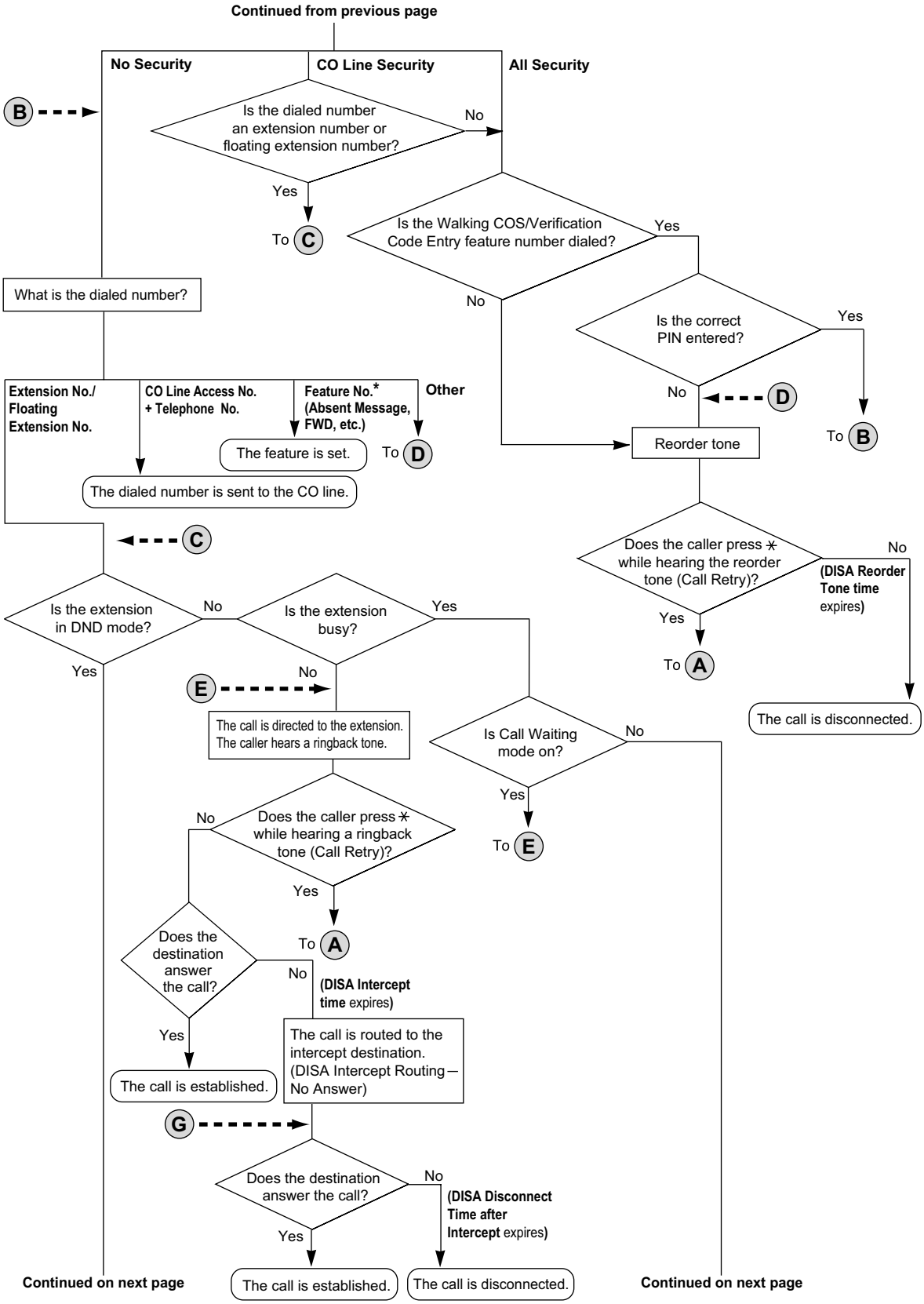

* Feature numbers are available only when the Walking COS feature is used.

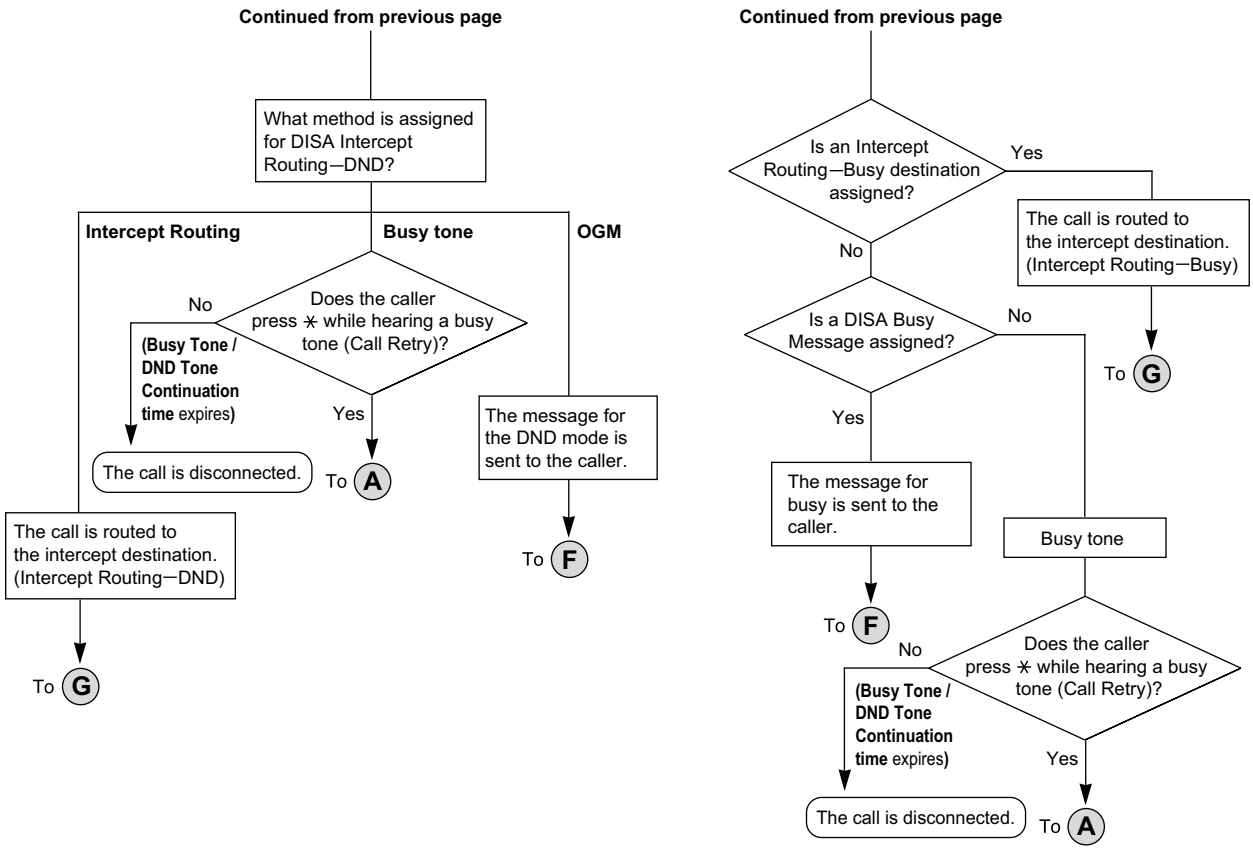

DISA Intercept Routing—No Dial

If the caller fails to dial any digits within a preprogrammed time period (DISA 1st Dial Time for Intercept) after hearing the outgoing message (OGM), one of the following can be selected through system programming:

a. Disable: The call will be terminated.

b. Operator: The call will be redirected to the operator.

c. AA-0, AA-9: The call will be redirected to the destination assigned to that AA number.

→ 4.5 [2-3] Timers & Counters—DISA / Door / Reminder / U. Conf—◆ DISA—No Dial Intercept Timer

→ [211] DISA Intercept Time

→ 7.3 [5-3-1] Voice Message—DISA System—Option 1—◆ DISA Intercept—Intercept when No Dial after DISA answers

DISA Built-in Automated Attendant Number (DISA AA Service)

After listening to the outgoing message (OGM), the caller may dial a single digit (DISA AA number). The destination for each DISA AA number can be assigned for each message. It is also possible to assign other DISA floating extension numbers as the destination (**Multistep DISA AA Service**).

If the caller dials a second digit within a preprogrammed time period (DISA 2nd Dial Time for AA), the DISA AA service is not employed.

7.4 [5-3-2] Voice Message—DISA Message—◆ 1 Digit AA Destination (Extension Number)—Dial 0–9

4.5 [2-3] Timers & Counters—DISA / Door / Reminder / U. Conf—◆ DISA—2nd Dial Timer for AA

Outgoing Message (OGM)

When a call arrives on a DISA line, a prerecorded DISA message will greet and guide the caller.

Any extension assigned as the manager can record outgoing messages (OGMs). (→ 12.1.2 OGM (Outgoing Message))

[Programming Example]

Outgoing Message (OGM) No.	Floating Extn. No.*1	Automated Attendant No.*2										Busy/ DND Message No.*3
		0	1	2	3	4	5	6	7	8	9	
01	501	100	301	200	103	202	101	102	400	104	205	04
02	502											05
:	:	:	:	:	:	:	:	:	:	:	:	:

*1 → 7.4 [5-3-2] Voice Message—DISA Message—◆ Floating Extension Number
→ [730] Outgoing Message (OGM) Floating Extension Number
*2 → 7.4 [5-3-2] Voice Message—DISA Message—◆ 1 Digit AA Destination (Extension Number)—Dial 0–9
*3 → 7.4 [5-3-2] Voice Message—DISA Message—◆ Busy / DND Message No.

DISA Security Mode and Available Features

If the DISA AA service is not employed, the caller may access the PBX features by entering the feature numbers. To prevent others from accessing the PBX features, it is possible to assign DISA security.
→ 7.3 [5-3-1] Voice Message—DISA System—◆ DISA Security—DISA Security Mode
→ [732] DISA Security Mode
The features available depend on the preprogrammed DISA security mode as follows:

Security Mode	Intercom Call	TIE Line Call		CO Line Call
		Without PBX Code	With PBX Code	
All Security				
CO Line Security	✓	✓		
No Security	✓	✓	✓	✓*1

✓: Available
*1 If CO line call is available, Account Code Entry (→ 1.1.2 Account Code Entry) is also available.

Note

DISA AA service and Operator Call (→ 12.1.5 Operator Features) are available for any security mode.

Security Mode Override by Verification Code Entry

If the caller performs Verification Code Entry (→ 19.1.1 Verification Code Entry) while hearing a DISA message, the security mode can be temporarily changed to No Security mode.
Entry method:
Verification Code Entry feature number + ✳ + verification code + verification code PIN
After changing mode, the new mode remains in force for the duration of the call.

DISA Intercept Routing—Busy

If the first destination called by the outside party is busy, the call is redirected as follows:

a. The call is redirected to the Intercept Routing—Busy destination assigned to the first destination.
b. If an Intercept Routing—Busy destination is not assigned to the first destination and a prerecorded DISA Busy Message is assigned, the caller will hear the DISA Busy Message.
c. If neither an intercept destination nor a DISA Busy Message is assigned, the caller will hear a busy tone.

6.1 [4-1-1] Wired Extension—Extension Settings—Intercept Destination—◆ Intercept Destination—When Called Party is Busy

DISA Intercept Routing—DND

If the destination called by the outside party is in DND mode and Idle Extension Hunting is not available, one of the following can be selected through system programming:

a. Busy Tone: The caller will hear a busy tone.

b. Enable: DND will redirect the call to the preprogrammed destination on an extension basis.

c. OGM: An outgoing message (OGM) will be sent to the caller. The message for DND mode can be assigned for each outgoing message (OGM) which has a DISA floating extension number.

7.3 [5-3-1] Voice Message—DISA System—◆ DISA Intercept—Intercept when destination through DISA sets DND

DISA Intercept Routing—No Answer

If a destination is not available to answer a DISA call within a preprogrammed time period (DISA Intercept time) after the call is reached, the call will be redirected to the programmed destination by the Intercept feature. If the intercept destination is not available to answer the call within a preprogrammed time period (DISA Disconnect Time after Intercept) after the DISA Intercept time expires, the call will be disconnected.

4.5 [2-3] Timers & Counters—DISA / Door / Reminder / U. Conf
→ ◆ DISA—Intercept Timer—Day, Lunch, Break, Night
→ ◆ DISA—Disconnect Timer after Intercept
→ [604] Extension Intercept Destination

Walking COS Through DISA

If the caller performs Walking COS (extension number and PIN entry) while hearing a DISA message, the security mode can be temporarily changed to No Security mode (→ 20.1.1 Walking COS). After performing Walking COS, the following features are available, using the settings of the specified extension:

- Intercom call
- TIE line call
- CO line call
- Call Forwarding (FWD)/Do Not Disturb (DND) setting (→ 4.1.10 DND (Do Not Disturb), → 6.1.6 FWD (Call Forwarding))
- Incoming Call Distribution Group Log-in/Log-out (→ 9.1.3 ICD Group Features—Log-in/Log-out)
- Absent Message setting (→ 1.1.1 Absent Message)
- Extension Dial Lock (→ 5.1.4 Extension Dial Lock)
- Time Service Switching Mode (→ 17.1.5 Time Service)

Note

When making a CO line call using Walking COS through DISA, the CLIP number for that call will be that of the extension seized by Walking COS. (→ 3.1.16 CLIP (Calling Line Identification Presentation))

DISA Automatic Walking COS

Registered outside destinations such as cellular phones can be automatically recognized as PBX extensions when calling through DISA. When the Caller ID of a received CO line call matches an entry in the System Speed Dialing Table, the calling telephone is given Walking COS authorization as assigned to the corresponding CLI destination extension. Therefore, the "CLI destination" setting in the System Speed Dialing Table is used here to specify the target extension that the calling telephone will be recognized as for Walking COS.

[Programming Example of DIL Table]

CO Line No.	CLI			DIL Destination		
	Day	Lunch	...	Day	Lunch	...
01	Disable	Disable	...	501 (DISA)	501 (DISA)	...

CO Line No.	CLI			DIL Destination		
	Day	Lunch	...	Day	Lunch	...
:	:	:	:	:	:	:

"CLI" must be set to Disable, to allow incoming calls to be received by DISA.
12.2 [10-2] DIL Table & Port Settings
→ DIL—◆ DIL Destination—Day, Lunch, Break, Night
→ CLI for DIL—◆ CLI Ring for DIL—Day, Lunch, Break, Night
[Programming Example of System Speed Dialing Table]

Location	Name	CO Line Access + Telephone Number	CLI Destination
000	J. Smith	912341115678	200
001	:	:	:
:	:	:	:

8.1 [6-1] System Speed Dial
→ ◆ CO Line Access Number + Telephone Number
→ ◆ CLI Destination
In this example, calls received on CO line 01 are routed to the DISA OGM with floating extension number 501. If the number of the received call (after modification according to the Caller ID table) is "1-234-111-5678", the call originator is recognized as extension 200, and the Walking COS feature is automatically activated. System programming is required to enable this feature.

SMDR

The call information for DISA is recorded as the one of the DISA floating extension numbers. (→ 16.1.4 SMDR (Station Message Detail Recording))

Conditions

CAUTION

There is a risk that fraudulent telephone calls will be made using the CO-to-CO Line Call feature of DISA. The cost of such calls will be billed to the owner/renter of the PBX.
To protect the PBX from this kind of fraudulent use, we strongly recommend:

a. Enabling DISA security (CO Line Security or All Security).
b. Keeping passwords (verification code PINs/extension PINs) secret.
c. Selecting complex, random PINs that cannot be easily guessed.
d. Changing PINs regularly.

- **Hardware Requirement:**
  This feature will function using the preinstalled MPR card. To increase the capacity of the feature it is possible to add an MSG4 card or ESVM4 card mounted on an OPB3 card.
- **DISA Delayed Answer Time**
  It is possible to set the Delayed Answer time so that the caller will hear a ringback tone within a preprogrammed time period first before hearing an outgoing message (OGM).
  4.5 [2-3] Timers & Counters—Dial / IRNA / Recall / Tone—◆ Recall—Hold Recall
  [209] DISA Delayed Answer Time
- **Call Retry**

While hearing a ringback, reorder, or busy tone, retrying the call is possible by pressing "✳". System programming selects whether pressing "✳" during a CO-to-CO line conversation returns to the DISA top menu or sends a DTMF tone.

- **DISA Mute Time**
  It is possible to set the Mute time until the outgoing message (OGM) plays and the PBX starts to receive the DTMF signaling after the caller reaches the DISA line.
  4.5 [2-3] Timers & Counters—DISA / Door / Reminder / U. Conf—◆ DISA—Mute & OGM Start Timer after answering
- **End of Call Detection**
  If a call through DISA is routed to a CO line, DISA can be used to detect the end of the call. This function can be disabled through system programming. If disabled, DISA is released when the CO-to-CO line connection is made.
  7.3 [5-3-1] Voice Message—DISA System—Option 1
  → ◆ CO-CO with DISA—DISA to Public CO
  → ◆ CO-CO with DISA—DISA to Private Network
  The following three types of tone detection can be enabled for each trunk group to disconnect a CO-to-CO line call via DISA.
  – Silence Detection
    → 5.1 [3-1-1] Trunk Group—TRG Settings—Tone Detection—◆ DISA Tone Detection—Silence
    → [475] DISA Silence Detection
  – Continuous Signal Detection
    → 5.1 [3-1-1] Trunk Group—TRG Settings—Tone Detection—◆ DISA Tone Detection—Continuous
    → [476] DISA Continuous Signal Detection
  – Cyclic Signal Detection
    → 5.1 [3-1-1] Trunk Group—TRG Settings—Tone Detection—◆ DISA Tone Detection—Cyclic
    → [477] DISA Cyclic Signal Detection
- **CO-to-CO Line Call Duration Limitation**
  For a call between two outside parties, even if end of call detection cannot be performed, the call can be disconnected by a system timer (→ 3.1.18 CO Line Call Limitation). If the timer expires, the line will be disconnected unless the originating caller extends the time by sending any DTMF signaling. The caller can prolong the call duration within the preprogrammed time period and preprogrammed number of times.
  4.5 [2-3] Timers & Counters—DISA / Door / Reminder / U. Conf
  → ◆ DISA—CO-to-CO Call Prolong Counter
  → ◆ DISA—CO-to-CO Call Prolong Time
  → [210] DISA CO-to-CO Line Call Prolong Time
- **Automatic DISA Activation**
  DISA can be set through system programming to automatically activate for the following types of CO-to-CO line calls, to enable detection of the end of the call.
  – When a CO line call is forwarded to another CO line
  – When a CO line call is transferred to another CO line
  – When a CO line call to an incoming call distribution group is answered by an outside destination member
  7.3 [5-3-1] Voice Message—DISA System—Option 1
  → ◆ CO-CO with DISA—Fwd/Transfer to Public CO
  → ◆ CO-CO with DISA—Fwd/Transfer to Private Network
  Before the call is made, the PBX confirms that a DISA port is available. If no DISA ports are available, the call is not routed to a CO line. For transferred calls or calls to an ICD Group, if the DISA port has become unavailable when the CO-to-CO line conversation is actually established, the call is established without DISA.
  When using this feature, the CO-to-CO Line Call Limitation timer should be enabled. In addition, prolonging the call through DTMF signaling is not available.
- **DISA Call Transfer from Outside Destination**

An outside party such as a cellular phone can transfer a CO line call to an extension (including TIE) or an outside party by pressing "#" + extension number (including TIE) or an outside party's number, if DISA is connected by the Automatic DISA Activation feature. This feature can be enabled or disabled through system programming. It is also possible to establish a Conference call (→ 3.1.19 Conference), perform Call Splitting (→ 3.1.10 Call Splitting), and page with a call on hold to transfer the call (→ 13.1.1 Paging).
7.3 [5-3-1] Voice Message—DISA System—Option 1
→ ◆ CO-CO with DISA—Transfer by DTMF "#" (Activation Key Required)
→ ◆ CO-CO with DISA—Return to DISA Top Menu by DTMF "*"

– The KX-NCS3910, KX-NCS4910 or KX-NCS4950 (Activation Key for Software Upgrade to Enhanced Version) is required to use this feature.
– DISA security mode should be set to No Security.
– If the called extension does not answer, is busy, or is in DND mode, the DISA Intercept feature operates.
– The party on hold can use the Call Retry feature.
– End of Call Detection does not operate after dialing "#".
– If the transferred call is forwarded to another outside destination, COS settings are ignored.
– If the call is transferred to an ICD group, the call will wait in a queue until answered, but the Queuing Time Table will not function.
– When using this feature, do not use the Executive Busy Override feature to interrupt the established call.

Redial with DTMF "✳" when receiving a CO line call (before the transfer destination—cellular phone—answers).

- It is possible to redial by using the DTMF tone "✳" before the transfer destination CO line (cellular phone) answers.
- If the transfer destination (cellular phone) is a line that does not support answer notification, outgoing dial completion is considered as answering.

- **DISA Call Transfer to Outside User**

When a call is received through DISA and the receiving extension is set to forward the call to an extension (including over a TIE connection) or an outside destination, the call can be forwarded automatically to an outside telephone number if the following conditions are met:

- An outside telephone number (e.g., a cellular phone number) is registered as the forward destination of the receiving extension.
- The forward destination's telephone number is registered in the System Speed Dial of the receiving extension.
- The forward destination's telephone number is set in the CLI Destination of the receiving extension.
- Automatic Walking COS is enabled for the receiving extension.

After a conversation is established with the forward destination (e.g., a cellular phone number), it is possible to establish a Conference call, perform Call Splitting, and page with a call on hold to transfer the call. This is the same as DISA Call Transfer from Outside Destination. For details, see "DISA Call Transfer from Outside Destination".

[Example]

a. Outside Caller calls Extn. 101 through DISA.
b. Extn. 101 forwards the call to Cellular Phone-1.
Outside Caller establishes a conversation with Cellular Phone-1.
c. Cellular Phone-1 presses "#" to put the conversation on hold, and then transfers the call to Cellular Phone-2.
At this point, the CLIP information shown on Cellular Phone-2 may be one of the following:
Case 1: When Extn. 101 forwarded the call, Automatic Walking COS was performed with Cellular Phone-1's telephone number.
– Displayed CLIP: Same as if Extn. 101 made a trunk call.

Case 2: When Extn. 101 forwarded the call, Automatic Walking COS was not performed, and ◆ **Send CLIP of CO Caller—when call is transferred to CO (CLIP of Held Party)** is set to **Enable**.
– Displayed CLIP: Outside Caller's telephone number and name.
Case 3: When Extn. 101 forwarded the call, Automatic Walking COS was not performed and ◆ **Send CLIP of CO Caller—when call is transferred to CO (CLIP of Held Party)** is set to **Disable**.
– Displayed CLIP: The CLIP set for the line that Cellular Phone-1 used to transfer the call.

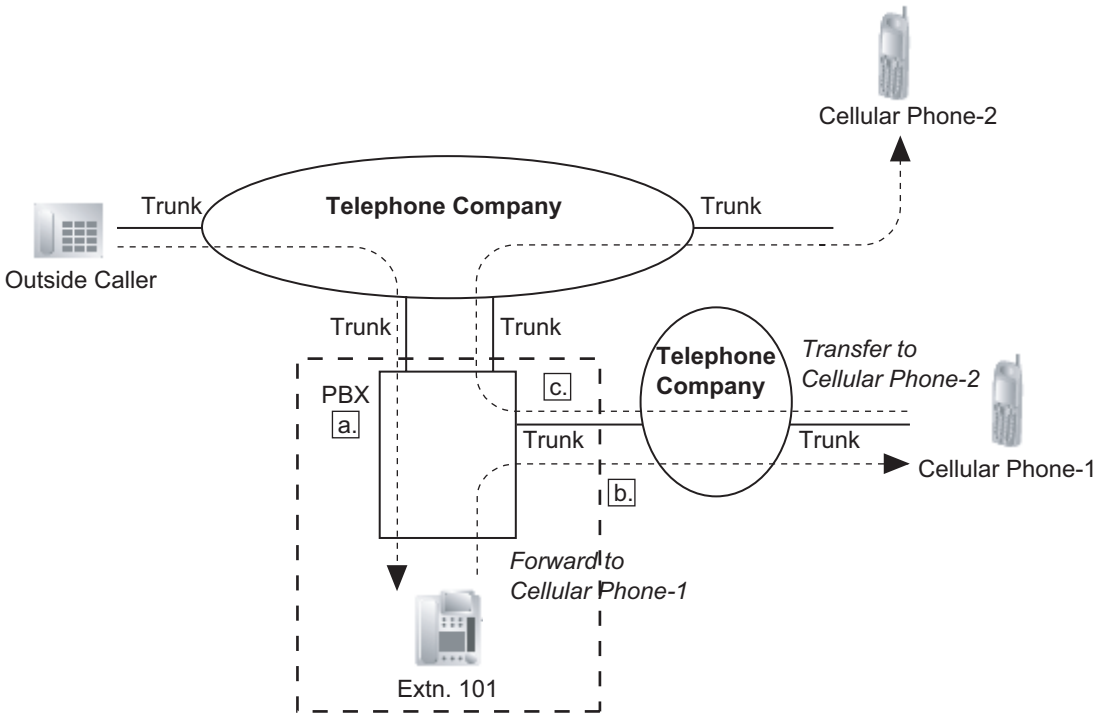

- **DISA Reorder Tone Duration**
  It is possible to set the DISA Reorder Tone Duration time. This specifies the length of time that a reorder tone will be sent to the caller. When the timer expires, the call will be disconnected. Call Retry is possible during the DISA Reorder Tone Duration time.
  → 4.5 [2-3] Timers & Counters—DISA / Door / Reminder / U. Conf—◆ DISA—Reorder Tone Duration
- **Call Deny**
  Extensions can deny DISA calls on a COS basis.
  → 4.12 [2-7-1] Class of Service—COS Settings—Optional Device & Other Extensions—◆ Accept the Call from DISA
- **Verification Code PIN Lock/Extension PIN Lock**
  If the wrong PIN is entered three times, the line will be disconnected. If the wrong PIN is entered a preprogrammed number of times successively, that extension or verification code will become locked, and even entering the correct PIN will not unlock it. Only an extension assigned as the manager can unlock it. In this case, the PIN will be unlocked and cleared.
  → 4.5 [2-3] Timers & Counters—Miscellaneous—◆ Extension PIN—Lock Counter
- **DISA Automatic Walking COS**
  The KX-NCS3910, KX-NCS4910 or KX-NCS4950 (Activation Key for Software Upgrade to Enhanced Version) is required to use this feature.
- Each outgoing message (OGM) can be assigned a name through system programming for programming reference.
  → 7.4 [5-3-2] Voice Message—DISA Message—◆ Name
  → [731] Outgoing Message (OGM) Name

Installation Manual References

KX-NCP500/KX-NCP1000

3.3.1 IPCMPR Card
3.7.1 OPB3 Card (KX-NCP1190)
3.7.5 MSG4 Card (KX-TDA0191)
3.7.6 ESVM4 Card (KX-TDA0194)

KX-TDE100/KX-TDE200

3.3.1 IPCMPR Card
3.7.1 OPB3 Card (KX-TDA0190)
3.7.5 MSG4 Card (KX-TDA0191)
3.7.6 ESVM4 Card (KX-TDA0194)

KX-TDE600

3.3.1 IPCEMPR Card
3.9.1 OPB3 Card (KX-TDA0190)
3.9.4 MSG4 Card (KX-TDA0191)
3.9.5 ESVM4 Card (KX-TDA0194)

PC Programming Manual References

4.5 [2-3] Timers & Counters—DISA / Door / Reminder / U. Conf
→◆ DISA—Delayed Answer Timer
→◆ DISA—Mute & OGM Start Timer after answering
→◆ DISA—No Dial Intercept Timer
→◆ DISA—2nd Dial Timer for AA
→◆ DISA—Intercept Timer—Day, Lunch, Break, Night
→◆ DISA—Disconnect Timer after Intercept
→◆ DISA—CO-to-CO Call Prolong Counter
→◆ DISA—CO-to-CO Call Prolong Time
→◆ DISA—Progress Tone Continuation Time before Recording Message
→◆ DISA—Reorder Tone Duration
4.5 [2-3] Timers & Counters—Miscellaneous—◆ Extension PIN—Lock Counter
4.12 [2-7-1] Class of Service—COS Settings—Optional Device & Other Extensions—◆ Accept the Call from DISA
4.18 [2-9] System Options—Option 4
→◆ Send CLIP of CO Caller—when call is transferred to CO (CLIP of Held Party)
5.1 [3-1-1] Trunk Group—TRG Settings—Tone Detection
→◆ DISA Tone Detection—Silence
→◆ DISA Tone Detection—Continuous
→◆ DISA Tone Detection—Cyclic
6.1 [4-1-1] Wired Extension—Extension Settings—Intercept Destination—◆ Intercept Destination—When called party does not answer—Day, Lunch, Break, Night
6.10 [4-2-1] Portable Station—Extension Settings—Intercept Destination—◆ Intercept Destination—When called party does not answer—Day, Lunch, Break, Night
7.3 [5-3-1] Voice Message—DISA System
7.4 [5-3-2] Voice Message—DISA Message
8.1 [6-1] System Speed Dial
→◆ CO Line Access Number + Telephone Number
→◆ CLI Destination
12.2 [10-2] DIL Table & Port Settings
→DIL—◆ DIL Destination—Day, Lunch, Break, Night
→CLI for DIL—◆ CLI Ring for DIL—Day, Lunch, Break, Night

PT Programming Manual References

[209] DISA Delayed Answer Time
[210] DISA CO-to-CO Line Call Prolong Time
[211] DISA Intercept Time
[475] DISA Silence Detection
[476] DISA Continuous Signal Detection
[477] DISA Cyclic Signal Detection
[604] Extension Intercept Destination
[730] Outgoing Message (OGM) Floating Extension Number
[731] Outgoing Message (OGM) Name
[732] DISA Security Mode

Feature Manual References

3.1.23 COS (Class of Service)
4.1.10 DND (Do Not Disturb)
6.1.6 FWD (Call Forwarding)
9.1.11 Intercept Routing
9.1.12 Intercept Routing—No Destination

Operating Manual References

1.3.19 DISA (Direct Inward System Access)
1.3.74 Walking COS

4.1.9 Display Information

Description

A display proprietary telephone (PT) can relay the following information to the user while making or receiving calls:

Display Item	Display Example	Condition
The extension number and name of the calling or called extension, or Incoming Call Distribution (ICD) Group	`123: Tom Smith`	–
Status of the called extension	`123: Busy`	–
The number and name of the optional device	`D02: 1st Door`	–
The telephone number dialed	`1234567890`	–

The received call information
a. Caller's name
b. Caller's number
c. CO line number/name
d. Original Destination, if the call is forwarded
e. DID name
	`ABC Company`
	`12345678`
	`Line 001: Sales`
	`→102:Mike`
	
	`Panasonic`*
		The first line message can be either (a), (c), or (e) at each extension through system programming. These can be displayed in turn by pressing the TRANSFER button or DISP Soft button during a call.

Display Item	Display Example	Condition
Duration of the current CO line call	`Line 001 11:02'28`	–

Conditions

- **Multilingual Display**
  Each extension can select its display language through personal programming (Display Language Selection).
- **Display Contrast**
  The display contrast can be adjusted through personal programming (Display Contrast Selection). This is available only for digital proprietary telephones (DPTs) and IP proprietary telephones (IP-PTs).
- **Display Backlight**
  Some extensions can select whether to turn the display backlight on or off through personal programming (Display Backlight Selection). For details, refer to the manual for your telephone.
- Characters (name) or digits (number) exceeding the display's limitations are not displayed. Although in this case information may not be displayed properly, the received information is not altered.

PC Programming Manual References

4.18 [2-9] System Options—Option 5—◆ PT Feature Access—No. 1–8
6.1 [4-1-1] Wired Extension—Extension Settings—Option 5
→◆ Display Language
→◆ Incoming Call Display
→◆ Automatic LCD Switch when Start Talking
6.10 [4-2-1] Portable Station—Extension Settings—Option 5
→◆ Display Language
→◆ Incoming Call Display
→◆ Automatic LCD Switch when Start Talking
12.1 [10-1] CO Line Settings—◆ CO Name

Operating Manual References

3.1.2 Personal Programming

4.1.10 DND (Do Not Disturb)

Description

An extension user can make use of the DND feature. If this feature is set, calls will not arrive at the extension, but will arrive at another extension using the Idle Extension Hunting feature (→ 9.1.9 Idle Extension Hunting) or the Intercept Routing—Busy/DND feature (→ 9.1.11 Intercept Routing). When a destination cannot be found, the calling extension will hear the DND tone, while the calling outside party will hear a busy tone.

Conditions

- **DND for CO Line Calls/Intercom Calls**
  The DND feature can be set for CO line calls, for intercom calls, or for both of them by the extension user.
- **DSS button in DND Mode**
  The DSS button light will turn red if the assigned extension has set DND.

- **DND Override**
  An extension in DND mode can be called by other extension users who are allowed to override DND in their COS.
- **Paging DND**
  It is programmable whether the PBX pages extensions in DND mode through system programming. (→ 13.1.1 Paging)
- **Intercept Routing—Busy/DND**
  If a call arrives at an extension in DND mode, the call can be redirected to a preprogrammed destination by the Intercept Routing—Busy/DND feature.
- **Idle Extension Hunting**
  While searching for an idle extension within an idle extension hunting group, any extension that has DND set will be skipped. The call will go to the next extension in the group, not the Intercept Routing—Busy/DND destination.
- If (1) a CO line call via the ELCOT/LCOT or T1 (LCOT/GCOT) card arrives at an extension in DND mode and (2) the Intercept Routing—Busy/DND destination is not available and (3) there is no available extension in the idle extension hunting group, then the original extension in DND mode will ring.
- Calls from a doorphone arrive at the extension even when the extension is in DND mode.

PC Programming Manual References

4.5 [2-3] Timers & Counters—Dial / IRNA / Recall / Tone—◆ Tone Length—Busy Tone / DND Tone
4.11 [2-6-3] Numbering Plan—B/NA DND Call Feature
→◆ BSS / OHCA / Whisper OHCA / DND Override
→◆ BSS / OHCA / Whisper OHCA / DND Override-2
4.12 [2-7-1] Class of Service—COS Settings—Assistant—◆ DND Override
6.1 [4-1-1] Wired Extension—Extension Settings—FWD / DND
6.3 [4-1-2] Wired Extension—FWD/DND
6.10 [4-2-1] Portable Station—Extension Settings— FWD / DND Reference
6.12 [4-2-2] Portable Station—FWD/DND

PT Programming Manual References

[507] DND Override

Feature Manual References

3.1.23 COS (Class of Service)

Operating Manual References

1.3.20 DND (Do Not Disturb)

4.1.11 Door Open

Description

Using an extension telephone, an extension user can unlock a door for a visitor.
The door can be unlocked by extension users who are allowed to unlock the door in Class of Service (COS) programming. While engaged on a doorphone call, any extension user can unlock the door to let the visitor in. (→ 4.1.12 Doorphone Call)

Conditions

- **Hardware Requirement:** A user-supplied door opener installed on each door.
- A door opener can unlock a door even if no doorphone is installed.
- **Door Open Duration**
  An opened door will remain unlocked for a preprogrammed length of time.

Installation Manual References

KX-NCP500/KX-NCP1000

3.9.1 Connection of Doorphones, Door Openers, External Sensors, and External Relays

KX-TDE100/KX-TDE200

3.9.1 Connection of Doorphones, Door Openers, External Sensors, and External Relays

KX-TDE600

3.11.1 Connection of Doorphones, Door Openers, External Sensors, and External Relays

PC Programming Manual References

4.5 [2-3] Timers & Counters—DISA / Door / Reminder / U. Conf—◆ Doorphone—Open Duration
4.9 [2-6-1] Numbering Plan—Main—Features—◆ Door Open
4.12 [2-7-1] Class of Service—COS Settings—Optional Device & Other Extensions—◆ Door Unlock

PT Programming Manual References

[207] Door Unlock Time
[512] Permission for Door Open Access

Feature Manual References

3.1.23 COS (Class of Service)

Operating Manual References

1.3.21 Door Open

4.1.12 Doorphone Call

Description

A visitor can use a doorphone to call its preprogrammed destination. Extension users can call a doorphone.

Conditions

- **Hardware Requirement:**
  An optional doorphone, the OPB card and DPH card
- **Call Destination**
  The destination of doorphone calls can be assigned to each doorphone port for each time mode. The Time Table is determined by the tenant number assigned to each doorphone port. (→ 17.1.5 Time Service)
  The following destinations cannot be the destination for doorphone calls:
  – Floating Extension no. for SVM

  - DISA
  - Analog/ISDN Remote Maintenance
- Class of Service (COS) programming determines the doorphone ports that are able to make an outgoing CO line call.
- Internal Call Block determines which extensions can call a doorphone. (→ 9.1.14 Internal Call Block)
- **Ring Duration**
  If an incoming doorphone call is not answered within a preprogrammed time period, ringing stops and the call is canceled.
- **Call Duration**
  The duration of doorphone calls can be restricted by a system timer. If the timer expires, the call will be disconnected.
- **Door Open**
  While engaged on a doorphone call, an extension user can unlock the door to let the visitor in. (→ 4.1.11 Door Open)
- A doorphone number can be referenced for each doorphone port.

Installation Manual References

KX-NCP500/KX-NCP1000

3.7.1 OPB3 Card (KX-NCP1190)
3.7.2 DPH4 Card (KX-TDA0161)
3.9.1 Connection of Doorphones, Door Openers, External Sensors, and External Relays

KX-TDE100/KX-TDE200

3.7.1 OPB3 Card (KX-TDA0190)
3.7.2 DPH4 Card (KX-TDA0161)
3.9.1 Connection of Doorphones, Door Openers, External Sensors, and External Relays

KX-TDE600

3.9.1 OPB3 Card (KX-TDA0190)
3.9.2 DPH4 Card (KX-TDA0161)
3.11.1 Connection of Doorphones, Door Openers, External Sensors, and External Relays

PC Programming Manual References

4.5 [2-3] Timers & Counters—DISA / Door / Reminder / U. Conf
→◆ Doorphone—Call Ring Duration
→◆ Doorphone—Call Duration
4.9 [2-6-1] Numbering Plan—Main—Features—◆ Doorphone Call
4.12 [2-7-1] Class of Service—COS Settings—TRS—◆ TRS Level—Day, Lunch, Break, Night
4.16 [2-8-2] Ring Tone Patterns—Call from Doorphone
4.18 [2-9] System Options—Option 3—◆ Confirmation Tone—Tone 1 : Called by Voice
7.1 [5-1] Doorphone

PT Programming Manual References

[720] Doorphone Call Destination
[729] Doorphone Number Reference

Operating Manual References

1.3.22 Doorphone Call

Section 5

Features and Configurations—E

5.1 E

5.1.1 EFA (External Feature Access)

Description

Normally, an extension user can only access features within the PBX. However, when performing External Feature Access (EFA) the extension user performs features outside of the PBX, such as using the transfer services of the telephone company or host PBX. When EFA is performed, the PBX sends a flash/recall signal to the telephone company or the host PBX (→ 8.1.5 Host PBX Access Code (Access Code to the Telephone Company from a Host PBX)).
This feature is only available on CO line calls.
This feature is performed by pressing the EFA button or the FLASH/RECALL button that is set to EFA mode (→ 6.1.2 Flash/Recall/Terminate).

Conditions

- **Flash/Recall Time**
  The Flash/Recall time can be assigned for each CO line port.
- **EFA Button**
  A flexible button can be customized as the EFA button.
- It is possible to perform this feature by entering the feature number while the current call is placed on Consultation Hold (e.g., is going to be transferred to an extension of the host PBX).
  (→ 3.1.22 Consultation Hold)

PC Programming Manual References

3.30 [1-1] Slot—Port Property - LCO Port—◆ Flash Time
3.36 [1-1] Slot—Port Property - T1 Port—◆ Flash Time
4.9 [2-6-1] Numbering Plan—Main—Features—◆ External Feature Access
6.1 [4-1-1] Wired Extension—Extension Settings—Option 7—◆ Flash Mode during CO Conversation
6.5 [4-1-4] Wired Extension—Flexible Button—◆ Type
6.10 [4-2-1] Portable Station—Extension Settings—Option 7—◆ Flash Mode during CO Conversation
6.13 [4-2-3] Portable Station—Flexible Button—◆ Type
6.18 [4-3] DSS Console—◆ Type
9.5 [7-5] Miscellaneous—◆ TRS Check after EFA

PT Programming Manual References

[417] LCOT Flash/Recall Time

Feature Manual References

6.1.3 Flexible Buttons

Operating Manual References

1.3.23 EFA (External Feature Access)

5.1.2 Emergency Call

Description

An extension user can dial preprogrammed emergency numbers after seizing a CO line regardless of the restrictions imposed on the extension.

Conditions

- A specified number of emergency numbers can be stored.
- Emergency numbers may be called, regardless of Toll Restriction (TRS) level (→ 17.1.6 TRS (Toll Restriction)), even when:
  – in Account Code—Forced mode (→ 1.1.2 Account Code Entry)
  – in Extension Dial Lock (→ 5.1.4 Extension Dial Lock)
- **CLIP Number Notification**
  When dialing an emergency number, the preassigned CLIP number for the extension will be sent as a location identification number. (→ 3.1.16 CLIP (Calling Line Identification Presentation))
  The CLIP number assigned to the extension will be sent regardless of the settings such as CLIR or CLIP number assigned to an ISDN port to be used. This feature is only available when using a PRI line, with E911-compatible services.

PC Programming Manual References

9.4 [7-4] Emergency Dial

PT Programming Manual References

[304] Emergency Number

Feature Manual References

21.1 Capacity of System Resources

5.1.3 Executive Busy Override

Description

Allows an extension user to interrupt an existing call to establish a three-party conference call.

Executive Busy Override Deny:
It is possible for extension users to prevent their calls from being interrupted by another extension user.

One-touch Executive Busy Override

Extension users can perform Executive Busy Override by simply pushing the S-CO button of a call in progress without entering a feature number. This feature can be enabled through system programming.

Conditions

[General]

- Class of Service (COS) programming determines the extension users who can use Executive Busy Override and set Executive Busy Override Deny.

- This feature will not function when the busy extension:
  a. Has set Executive Busy Override Deny or Data Line Security (→ 4.1.1 Data Line Security).
  b. Is being monitored by another extension (→ 3.1.7 Call Monitor).
  c. Is receiving an Off-hook Call Announcement (OHCA) (→ 12.1.3 OHCA (Off-hook Call Announcement)) or Whisper OHCA (→ 20.1.4 Whisper OHCA).
  d. Is on a conference call (→ 3.1.19 Conference, → 13.1.14 Privacy Release).
  e. Is on a doorphone call (→ 4.1.12 Doorphone Call).
  f. Is using Live Call Screening (LCS) or Two-way Record (→ 19.1.4 Voice Mail DPT (Digital) Integration).
  g. Has a call on consultation hold (→ 4.1.8 DISA (Direct Inward System Access)).
- This feature is not available for a CO-to-CO line call via Direct Inward System Access (DISA).

[One-touch Executive Busy Override]

- Automatic Callback Busy cannot be used on CO lines that have this feature enabled (→ 1.1.4 Automatic Callback Busy (Camp-on)).

PC Programming Manual References

4.9 [2-6-1] Numbering Plan—Main—Features—◆ Executive Override Deny Set / Cancel
4.11 [2-6-3] Numbering Plan—B/NA DND Call Feature—◆ Executive Busy Override
4.12 [2-7-1] Class of Service—COS Settings—Executive
→◆ Executive Busy Override
→◆ Executive Busy Override Deny
4.18 [2-9] System Options—Option 1—◆ PT Operation—One-touch Busy Override by SCO key
6.1 [4-1-1] Wired Extension—Extension Settings—Option 3—◆ Executive Override Deny
6.10 [4-2-1] Portable Station—Extension Settings—Option 3—◆ Executive Override Deny

PT Programming Manual References

[505] Executive Busy Override
[506] Executive Busy Override Deny

Feature Manual References

3.1.23 COS (Class of Service)

Operating Manual References

1.3.24 Executive Busy Override

5.1.4 Extension Dial Lock

Description

An extension user can change the Toll Restriction (TRS) level of the telephone (→ 17.1.6 TRS (Toll Restriction)) so that other users cannot make inappropriate CO line calls. An extension personal identification number (PIN) is used to unlock the telephone (→ 5.1.6 Extension PIN (Personal Identification Number)). This feature is also known as Electronic Station Lockout.

Conditions

- This feature also restricts changing the Call Forward (FWD) destination. (→ 6.1.6 FWD (Call Forwarding))
- **Remote Extension Dial Lock**
  Overrides Extension Dial Lock. If an extension assigned as the manager sets Remote Extension Dial Lock on an extension that has already been locked by the extension user, the user cannot unlock it. If a manager extension unlocks an extension that has been locked by the extension user, the extension will be unlocked. This feature is also known as Remote Station Lock Control.
- **TRS Level**
  COS programming determines the TRS level for Extension Dial Lock.
- Other features can also temporarily change an extension's TRS level, similar to Extension Dial Lock. If an extension is locked, the TRS level determined by the following features takes priority. The numbers below (1 through 3) indicate the priority of each feature, with 1 having the highest priority, and 3 having the lowest.
  1. Dial Tone Transfer (→ 4.1.5 Dial Tone Transfer)
  2. TRS Override by System Speed Dialing (→ 17.1.6 TRS (Toll Restriction))
  3. Verification Code Entry/Walking COS (→ 19.1.1 Verification Code Entry, → 20.1.1 Walking COS)

PC Programming Manual References

4.9 [2-6-1] Numbering Plan—Main—Features
→◆ Extension Dial Lock Set / Cancel
→◆ Remote Extension Dial Lock Off
→◆ Remote Extension Dial Lock On

PT Programming Manual References

[510] TRS Level for Extension Dial Lock

Feature Manual References

3.1.23 COS (Class of Service)

Operating Manual References

1.3.25 Extension Dial Lock
3.2.2 Manager Programming

5.1.5 Extension Feature Clear

Description

Extension users can clear the following features set on their own telephone at once:

Features	After Setting
Absent Message	**Off**
BGM	**Off**
FWD[*1]/DND[*1]	**Off**
Call Pickup Deny	**Allow**

Features	After Setting
Call Waiting*1	**Enable (Call Waiting tone)**
Data Line Security	**Off**
Executive Busy Override Deny	**Allow**
Log-in/Log-out	**Log-in**
Message Waiting	**All messages left by other extensions will be cleared.**
Paging Deny	**Allow**
Paralleled Telephone	**Paired SLT will ring.**
Hot Line*1	**Off**
Timed Reminder	**Cleared**

*1 These features can be programmed to not be canceled by Extension Feature Clear.

This feature is also known as Station Program Clear.

Conditions

- Extension Dial Lock (→ 5.1.4 Extension Dial Lock) and the extension personal identification number (PIN) (→ 5.1.6 Extension PIN (Personal Identification Number)) will not be cleared by this feature.
- **If dial tone 2 is heard after Extension Feature Clear:**
  After performing Extension Feature Clear, Call Waiting will be enabled if "**`Extension Clear: Call Waiting`**" is set to "**`Clear`**" through system programming. In this case, dial tone 2 will be heard when going off-hook. (→ 4.1.4 Dial Tone)

PC Programming Manual References

4.9 [2-6-1] Numbering Plan—Main—Features—◆ Extension Feature Clear
4.18 [2-9] System Options—Option 2
→◆ Extension Clear—Call Waiting
→◆ Extension Clear—Fwd/DND
→◆ Extension Clear—Hot Line (Pickup Dial)

Operating Manual References

1.3.26 Extension Feature Clears

5.1.6 Extension PIN (Personal Identification Number)

Description

Each extension user can be assigned a personal identification number (PIN) through system programming or personal programming (Extension PIN [Personal Identification Number]). This PIN is used to set features or access the extension remotely.
The following features require a valid PIN:

a. Live Call Screening (LCS)*1 (→ 19.1.4 Voice Mail DPT (Digital) Integration)

b. Incoming and Outgoing Call Log Display Lock (→ 16.1.7 Speed Dialing, Personal), Personal Speed Dialing Display Lock (→ 3.1.6 Call Log, Incoming)
c. Walking Extension (→ 20.1.2 Walking Extension)
d. Extension Dial Lock (→ 5.1.4 Extension Dial Lock)
e. Walking COS (→ 20.1.1 Walking COS)
f. Walking COS through DISA (→ 4.1.8 DISA (Direct Inward System Access))
*1 If an extension user has assigned an extension PIN, the PIN is required when activating this feature.

Conditions

CAUTION

There is a risk that fraudulent telephone calls will be made if a third party discovers a personal identification number (PIN) (verification code PIN or extension PIN) of the PBX. The cost of such calls will be billed to the owner/renter of the PBX. To protect the PBX from this kind of fraudulent use, we strongly recommend:

a. Keeping PINs secret.
b. Selecting complex, random PINs that cannot be easily guessed.
c. Changing PINs regularly.

- **Extension PIN Lock**
  If the extension PIN is entered incorrectly three times, the line will be disconnected. If an incorrect PIN is entered a preprogrammed number of times, the PIN will be locked. Only an extension assigned as a manager can unlock a PIN, after which it will be reset. In this case, the PIN will be unlocked and cleared. This feature is also known as Station Password Lock.
- **Remote Extension PIN Clear**
  If an extension user forgets his or her PIN, a manager can clear (reset) the PIN, and the extension user can assign a new PIN.
- **Extension PIN Display**
  It is possible to select whether to show the extension PIN on the display through system programming. By default, it is shown as dots.

PC Programming Manual References

4.5 [2-3] Timers & Counters—Miscellaneous—◆ Extension PIN—Lock Counter
4.9 [2-6-1] Numbering Plan—Main—Features—◆ Extension PIN Set / Cancel
4.18 [2-9] System Options—Option 1—◆ PT LCD—Password / PIN Display
6.1 [4-1-1] Wired Extension—Extension Settings—Main—◆ Extension PIN
6.10 [4-2-1] Portable Station—Extension Settings—Main—◆ Extension PIN

PT Programming Manual References

[005] Extension Personal Identification Number (PIN)

Operating Manual References

3.1.2 Personal Programming
3.2.2 Manager Programming

5.1.7 Extension Port Configuration

Description

There are three types of extension ports, used to connect digital proprietary telephones (DPTs), analog proprietary telephones (APTs), single line telephones (SLTs), Cell Stations (CSs), DSS Consoles, and Voice Processing Systems (VPS) to the PBX. The devices which can be connected to each type of port are listed below.

a. **DPT Port:** DPT, DSS Console, Panasonic VPS which supports DPT (Digital) Integration, and PT-interface CS (e.g., KX-TDA0158)
b. **SLT Port:** SLT and Panasonic VPS which supports DTMF Integration
c. **Super Hybrid Port:** DPT, APT, SLT, DSS Console, Panasonic VPS, and PT-interface CS

EXtra Device Port (XDP):

A Super Hybrid port can be used as an XDP port, allowing two telephones (a DPT and an SLT) to be connected to the same port of the PBX. This XDP port can be used in one of the following modes:

Mode	Description
Parallel Mode	The DPT and an SLT share the **same extension number** so that they can act as one extension. The SLT uses the extension data (extension number, Class of Service [COS], etc.) of the DPT. (→ 13.1.2 Paralleled Telephone)
XDP Mode	The DPT and SLT have **different extension numbers** and act as independent extensions. To use XDP mode, XDP mode must be enabled for the port through system programming. (→ 13.1.2 Paralleled Telephone)

Conditions

- **Automatic Detection on Super Hybrid Port**
  A DPT, SLT, or PT-interface CS connected to a Super Hybrid port can be detected automatically without any programming. An APT connected to a Super Hybrid port can be detected automatically when XDP mode has been disabled.
- A DSS Console or a Panasonic VPS which supports DPT (Digital) Integration can also be connected with an SLT in XDP mode.
- **APT and SLT in Parallel Mode**
  An APT and an SLT can also be connected to a Super Hybrid port and used in parallel mode.
- **Digital XDP**
  A DPT can be connected to another DPT and act as an independent extension with its own extension number. (→ 13.1.2 Paralleled Telephone)
- **Wireless XDP Parallel Mode**
  A PS can be used in Wireless XDP Parallel mode with a wired telephone.
  (→ 20.1.5 Wireless XDP Parallel Mode)
- **DSS Console and Paired Telephone Assignment**
  When a DSS Console is connected, a PT must be paired with the DSS Console through system programming.

PC Programming Manual References

3.24 [1-1] Slot—Port Property - Extension Port
6.18 [4-3] DSS Console—◆ Pair Extension

PT Programming Manual References

[007] DSS Console Paired Telephone
[600] EXtra Device Port (XDP) Mode

5.1.8 External Relay

Description

By turning external device relays on and off, the PBX can control external devices such as alarms.
When an extension user enters the External Relay Control feature number, the specified relay turns on for a preprogrammed length of time. When this timer expires, the relay turns off automatically. This gives the PBX simple control over other equipment, allowing an extension user to, for example, activate an alarm from his extension.
If the relay cannot be accessed (for example, because use is not permitted by COS, or the port is not in service), a reorder tone will be heard at the extension.

Conditions

- **Hardware Requirement:**
  An external relay device, OPB card and EIO card
- Some devices may be unable to communicate correctly with the PBX. Confirm compatibility with the manufacturer of a device before installing it.
- Each external relay port has a COS assigned. This and the COS of an extension determine the extension users who can use External Relay Control.
- The length of time that a relay is turned on can be specified separately for each relay through system programming.
- If the same or another extension tries to access an external relay that has already been switched on, the timer for that relay is reset.

Installation Manual References

KX-NCP500/KX-NCP1000

3.7.1 OPB3 Card (KX-NCP1190)
3.7.3 EIO4 Card (KX-TDA0164)
3.9.1 Connection of Doorphones, Door Openers, External Sensors, and External Relays

KX-TDE100/KX-TDE200

3.7.1 OPB3 Card (KX-TDA0190)
3.7.3 EIO4 Card (KX-TDA0164)
3.9.1 Connection of Doorphones, Door Openers, External Sensors, and External Relays

KX-TDE600

3.9.1 OPB3 Card (KX-TDA0190)
3.9.3 EIO4 Card (KX-TDA0164)
3.11.1 Connection of Doorphones, Door Openers, External Sensors, and External Relays

PC Programming Manual References

4.9 [2-6-1] Numbering Plan—Main—Features—◆ External Relay Access
4.12 [2-7-1] Class of Service—COS Settings—Optional Device & Other Extensions—◆ External Relay Access
7.6 [5-4] External Relay

Feature Manual References

3.1.23 COS (Class of Service)

Operating Manual References

1.3.28 External Relay

5.1.9 External Sensor

Description

External sensing devices, such as security alarms or smoke detectors, can be connected to the PBX. When the PBX receives input from a sensor, a call is made to the preset destination, alerting the extension user. The available destinations of a sensor call are as follows:

[Available Destinations]

Destination	Availability
Wired Extension (PT/SLT/T1-OPX)	✓
PS	✓
SIP Extension	
ICD Group	
PS Ring Group	
Floating Extension no. for SVM	
VM Group (DTMF/DPT)	
External Pager (TAFAS)	
DISA	
Analog/ISDN Remote Maintenance	
Idle Line Access no. + Phone no.	
Trunk Group Access no. + Trunk Group no. + Phone no.	
Extension of Another PBX (via TIE Line, Access with PBX Code)	
Extension of Another PBX (via TIE Line, Access without PBX Code)	

When the call is answered, if distinctive dial tones are enabled, dial tone 3 is heard, which continues until the user goes on-hook. If the sensor call is not answered within a specified time, the call will be canceled. It is possible to set a different ring tone pattern for calls received from each external sensor, to distinguish between them.

Conditions

- **Hardware Requirement:**
  An external sensor, OPB card and EIO card
- Some devices may be unable to communicate correctly with the PBX. Confirm compatibility with the manufacturer of a device before installing it.

- After a sensor has been activated, the PBX will ignore any further alerts from the same sensor for the duration specified by a timer. This timer can be set separately for each sensor.
- As long as the previous sensor call is still being performed, any further alerts from the same sensor are ignored.
- The assigned sensor name and/or number are shown on the display of PTs and PSs when a sensor call is received.
- If the destination of a sensor call has set FWD, the sensor call will be redirected to the FWD destination. However, if the FWD destination is not supported as the destination of a sensor call (e.g., an outside party), the call will be received at the original destination. (→ 6.1.6 FWD (Call Forwarding))
- The following features cannot be used when a sensor call is received:
  – Alternate Receiving—Voice (→ 9.1.13 Intercom Call)
  – Hands-free Answerback (→ 8.1.1 Hands-free Answerback)
  – Consultation Hold/Call Hold (→ 3.1.22 Consultation Hold, → 3.1.5 Call Hold)
  – Call Transfer (→ 3.1.11 Call Transfer)
  – Executive Busy Override (→ 5.1.3 Executive Busy Override)
- Sensor call information is output on SMDR.

Installation Manual References

KX-NCP500/KX-NCP1000

3.7.1 OPB3 Card (KX-NCP1190)
3.7.3 EIO4 Card (KX-TDA0164)
3.9.1 Connection of Doorphones, Door Openers, External Sensors, and External Relays

KX-TDE100/KX-TDE200

3.7.1 OPB3 Card (KX-TDA0190)
3.7.3 EIO4 Card (KX-TDA0164)
3.9.1 Connection of Doorphones, Door Openers, External Sensors, and External Relays

KX-TDE600

3.9.1 OPB3 Card (KX-TDA0190)
3.9.3 EIO4 Card (KX-TDA0164)
3.11.1 Connection of Doorphones, Door Openers, External Sensors, and External Relays

PC Programming Manual References

3.44 [1-1] Slot—OPB3 Card Property
→◆ Input Signal Decision Time
→◆ Input Signal Detection Reopening Time
4.5 [2-3] Timers & Counters—Miscellaneous—◆ External Sensor—Ring Duration
4.17 [2-8-3] Ring Tone Patterns—Call from Others—◆ External Sensor—Ring Tone Pattern Plan 1–8
7.7 [5-5] External Sensor

Section 6

Features and Configurations—F

6.1 F

6.1.1 Fixed Buttons

Description

Proprietary telephones (PTs), DSS Consoles, and Add-on Key Modules feature a wide variety of feature buttons and Line Access buttons, explained below.
Note that certain models do not feature certain buttons.
For a description of the buttons found on portable stations (PSs), please refer to the Operating Instructions for each PS.

[PT and Add-on Key Module]

Button		Usage
Navigator Key, Jog Dial, Volume Key		Used to adjust the volume of the ringer, speaker, handset and headset, and also adjust the display contrast. The Navigator Key and Jog Dial can also be used to select data from the Call Directory and the System Feature Access Menu on the display.
ENTER		Used to confirm the selected item.
CANCEL		Used to cancel the selected item.
PROGRAM		Used to enter and exit programming mode.
FLASH/RECALL		Used to disconnect the current call and make another call without hanging up (Flash/Recall mode or Terminate mode), or used to send a flash/recall signal to the telephone company or host PBX to access external features (External Feature Access mode). This button can also be used as a CANCEL button while on-hook.
HOLD		Used to place a call on hold.
SP-PHONE (Speakerphone)		Used for hands-free operation. Also used to switch between handset and hands-free operation.
MONITOR		Used for hands-free dialing. Also used to monitor the other party's voice in hands-free mode.
MESSAGE		Used to leave a Message Waiting indication or call back the party who left the Message Waiting indication.
REDIAL		Used to redial the last number dialed.
TRANSFER		Used to transfer a call to another party.

Button	Usage
Flexible CO	Used to access a CO line or trunk group when making or receiving a call according to the button's preprogrammed CO Line Access method (Default: S-CO). Can also be customized as a different feature button.
INTERCOM	Used to make or receive intercom calls.
AUTO ANS (Auto Answer)/MUTE	Used to receive an incoming call in hands-free mode, or used to mute the built-in microphone or handset during a conversation.
VOICE CALL/MUTE	Used to monitor an intercom call automatically (a hands-free conversation is not possible). Also used to mute the handset during a conversation.
AUTO DIAL/STORE	Used for System/Personal Speed Dialing and storing program changes.
CONF (Conference)	Used to establish a multiparty conversation.
FWD/DND	Used to set Call Forwarding (FWD) or Do Not Disturb (DND).
PAUSE	Used to insert a dialing pause in a stored number. Also used as the Program button on analog proprietary telephones (APTs) which do not have the PROGRAM button.
Soft	Used to select the item displayed on the bottom line of the display.
SELECT	Used to select the displayed item or to call the displayed number.
SHIFT	Used to access the second level of Soft button items.
MODE	Used to change the current display to access various features.
NEXT PAGE	Used to switch the page for the Self Labeling feature (KX-NT366/ KX-NT560).

[DSS Console]

Button	Usage
ANSWER	Used to answer an incoming call, or place the current call on hold and answer another call with a one-touch operation.
RELEASE	Used to disconnect the line during or after a conversation, or to complete a Call Transfer.
Flexible CO	Used to access a CO line or trunk group when making or receiving a call according to the button's preprogrammed CO Line Access method. Can also be customized as a different feature button.
Flexible DSS (Direct Station Selection)	Used to call an extension with a one-touch operation. Each button is programmed to correspond to an extension. DSS buttons can also be customized as other different feature buttons.
PF (Programmable Feature)	Used to access a preprogrammed feature with a one-touch operation. (no default)

Conditions

- Certain buttons are equipped with a light to indicate the status of the corresponding line or feature.

6.1.2 Flash/Recall/Terminate

Description

A proprietary telephone (PT) user can use the FLASH/RECALL button (Flash/Recall mode or Terminate mode) or Terminate button (Terminate mode) to disconnect the current call and originate another call without hanging up.
Flash/Recall Mode: Disconnects the line and the extension user hears the dial tone from the line used last. For example, if a CO line call is disconnected, the extension user will hear a new dial tone from the same CO line.
Terminate Mode: Disconnects the line and the extension user hears a dial tone via the preferred CO line. (→ 10.1.3 Line Preference—Outgoing)

Conditions

- **FLASH/RECALL Button Mode**
  One of the following modes can be selected for each extension through system programming:
  – Flash/Recall mode
  – Terminate mode
  – EFA mode (→ 5.1.1 EFA (External Feature Access))
- **Terminate Button**
  Any flexible button can be customized as the Terminate button.
- **Disconnect Time (Only for Flash/Recall Mode)**
  The amount of time between successive accesses to the same CO line is programmable for each CO line port.
- This feature generates a Station Message Detail Recording (SMDR) call record (→ 16.1.4 SMDR (Station Message Detail Recording)), restarts the call timer, inserts a pause, and checks the Toll Restriction (TRS) level (→ 17.1.6 TRS (Toll Restriction)) again.
- The Terminate feature will be performed when pressing the FLASH/RECALL button regardless of the mode that the FLASH/RECALL button has been set to, in the following situations:
  – When a call is made using ARS. (→ 1.1.3 ARS (Automatic Route Selection))
  – When a CO line call is made with the INTERCOM button.
  – When a CO line call is made with an Incoming Call Distribution (ICD) group button.

PC Programming Manual References

3.30 [1-1] Slot—Port Property - LCO Port—◆ Disconnect Time
3.36 [1-1] Slot—Port Property - T1 Port—◆ Disconnect Time
6.1 [4-1-1] Wired Extension—Extension Settings—Option 7—◆ Flash Mode during CO Conversation
6.5 [4-1-4] Wired Extension—Flexible Button—◆ Type
6.10 [4-2-1] Portable Station—Extension Settings—Option 7—◆ Flash Mode during CO Conversation
6.13 [4-2-3] Portable Station—Flexible Button—◆ Type
6.18 [4-3] DSS Console—◆ Type

PT Programming Manual References

[418] LCOT Disconnect Time

Feature Manual References

6.1.3 Flexible Buttons

6.1.3 Flexible Buttons

Description

Flexible buttons are customized through either system or personal programming. They can then be used to make or receive intercom or CO line calls or be used as feature buttons, as follows:

[Button Usage]

Button	Usage
Single-CO (S-CO)	Used to access a specified CO line for making or receiving calls. (→ 3.1.17 CO Line Access)
Group-CO (G-CO)	Used to access an idle CO line in a specified trunk group for making calls. Incoming calls from CO lines in the assigned trunk group arrive at this button. (→ 3.1.17 CO Line Access)
Loop-CO (L-CO)	Used to access an idle CO line for making calls. Incoming calls from any CO line arrive at this button. (→ 3.1.17 CO Line Access)
Direct Station Selection (DSS)	Used to call an extension with a one-touch operation. (→ 9.1.13 Intercom Call)
Network Direct Station Selection (NDSS)	Used to access an extension at another PBX within the same network. (→ 13.1.17 Private Network Features—NDSS (Network Direct Station Selection))
One-touch Dialing	Used to call a preprogrammed party or access a feature with a one-touch operation. (→ 12.1.4 One-touch Dialing)
Incoming Call Distribution (ICD) Group	Used to access a specified incoming call distribution (ICD) group for making or receiving calls. (→ 9.1.1 ICD GROUP FEATURES)
Message	Used to leave a Message Waiting indication or call back the party who left the Message Waiting indication. (→ 11.1.3 Message Waiting)
FWD/DND (External/Internal/ Both)[*1]	Used to set the FWD or DND feature for the extension. The feature is applied to CO line calls, intercom calls, or both. (→ 6.1.7 FWD/ DND Button, Group FWD Button)
Group FWD (External/Internal/ Both)	Used to set the FWD feature for a specified ICD group. The feature is applied to CO line calls, intercom calls, or both. (→ 6.1.7 FWD/ DND Button, Group FWD Button)
Account Code Entry (Account)	Used to enter an account code. (→ 1.1.2 Account Code Entry)
Conference	Used to establish a multiparty conversation. (→ 3.1.19 Conference)
Terminate	Used to disconnect the current call and make another call without hanging up. (→ 6.1.2 Flash/Recall/Terminate)

Button	Usage
External Feature Access (EFA)	Used to send a flash/recall signal to the telephone company or host PBX to access external features. (→ 5.1.1 EFA (External Feature Access))
Call Park	Used to park or retrieve a call in a preset PBX parking zone. (→ 3.1.8 Call Park)
Call Park (Automatic Park Zone)	Used to park a call in an idle PBX parking zone automatically. (→ 3.1.8 Call Park)
Call Log	Used to show a log of received calls. (→ 3.1.6 Call Log, Incoming)
Log-in/Log-out[*1]	Used to switch between Log-in and Log-out status. (→ 9.1.3 ICD Group Features—Log-in/Log-out)
Hurry-up	Used to redirect the longest waiting call in the queue of an ICD group to the overflow destination. (→ 9.1.6 ICD Group Features—Queuing)
Wrap-up[*1]	Used to switch between Wrap-up/Not Ready and Ready modes. (→ 9.1.3 ICD Group Features—Log-in/Log-out)
System Alarm	Used to display a PBX error. (→ 10.1.4 Local Alarm Information)
Time Service[*1]	Used to change or display the current time mode (day/lunch/break/night). (→ 17.1.5 Time Service)
Answer	Used to answer an incoming call. (→ 8.1.3 Headset Operation)
Release	Used to disconnect the line during or after a conversation, or to complete a Call Transfer. (→ 8.1.3 Headset Operation)
Toll Restriction	Used to change the Toll Restriction (TRS) level of other extension users temporarily. (→ 4.1.5 Dial Tone Transfer)
Calling Line Identification Restriction (CLIR)[*1]	Used to switch between CLIP and CLIR services. (→ 3.1.16 CLIP (Calling Line Identification Presentation), → 13.1.23 Private Network Features—QSIG—CLIP/COLP (Calling/Connected Line Identification Presentation) and CNIP/CONP (Calling/Connected Name Identification Presentation))
Connected Line Identification Restriction (COLR)[*1]	Used to switch between COLP and COLR services. (→ 13.1.23 Private Network Features—QSIG—CLIP/COLP (Calling/Connected Line Identification Presentation) and CNIP/CONP (Calling/Connected Name Identification Presentation))
Headset	Used to turn headset mode on/off while idle. Used to switch between hands-free mode and headset modes during a conversation. (→ 8.1.3 Headset Operation)
Time Service Switching Mode (Automatic/Manual)[*1]	Used to switch between Automatic Switching and Manual Switching mode. (→ 17.1.5 Time Service)
Two-way Record	Used to record a conversation into your own mailbox. (→ 19.1.4 Voice Mail DPT (Digital) Integration)
Two-way Transfer	Used to record a conversation into the mailbox of a specified extension. (→ 19.1.4 Voice Mail DPT (Digital) Integration)

Button	Usage
One-touch Two-way Transfer	Used to record a conversation into the mailbox of a specified extension with a one-touch operation. (→ 19.1.4 Voice Mail DPT (Digital) Integration)
Live Call Screening (LCS)	Used to monitor your own voice mailbox while a caller is leaving a message and, if desired, intercept the call. (→ 19.1.4 Voice Mail DPT (Digital) Integration)
Voice Mail (VM) Transfer	Used to transfer a call to the mailbox of a specified extension. Also used to access Voice Mail features when using a DPT integrated VPS. (→ 19.1.4 Voice Mail DPT (Digital) Integration, → 19.1.5 Voice Mail DTMF Integration)
Check-in	Used to switch the status of extensions from Check-out to Check-in. (→ 15.1.3 Room Status Control)
Check-out	Used to switch the status of extensions from Check-in to Check-out. (→ 15.1.3 Room Status Control)
Cleaned-up	Used to switch the room status of extensions between Ready and Not Ready. (→ 15.1.3 Room Status Control)
CTI	Used to access CTI features. (→ 3.1.25 CTI (Computer Telephony Integration))
Primary Directory Number (PDN)	Used to make and receive both outside and intercom calls. (→ 13.1.7 PDN (Primary Directory Number)/SDN (Secondary Directory Number) Extension)
Secondary Directory Number (SDN)	Used to show the current status of another extension, call the extension, and pick up or transfer calls to it. (→ 13.1.7 PDN (Primary Directory Number)/SDN (Secondary Directory Number) Extension)

*1 **One-touch Feature Setting Buttons:** Pressing these buttons while on-hook changes the feature settings. The new mode will be displayed for a preprogrammed time period.

Conditions

- The Flexible button lights of the KX-T7040 and KX-T7240 DSS Consoles can be either "Off" or "Red On". If a button is customized as a button which shows other light patterns, these patterns will be indicated as "Red On".

PC Programming Manual References

4.5 [2-3] Timers & Counters—Miscellaneous—◆ PT Display—PT Last Display Duration in Idle Mode
6.5 [4-1-4] Wired Extension—Flexible Button
6.6 [4-1-4] Wired Extension—Flexible Button—Flexible button data copy
6.7 [4-1-5] Wired Extension—PF Button
6.13 [4-2-3] Portable Station—Flexible Button
6.18 [4-3] DSS Console

Operating Manual References

3.1.4 Customizing the Buttons

6.1.4 Flexible Numbering/Fixed Numbering

Description

To dial another extension user or to access PBX features, the access numbers (extension numbers or feature numbers) are required.
There are three types of numbering plans:

1. Flexible Numbering (available while a dial tone is heard)
2. Flexible Numbering (available while busy, DND, or ringback tone is heard)
3. Fixed Numbering (available while dialing or talking)

1. **Flexible Numbering (available while a dial tone is heard)**
   Extension numbers and feature numbers which are available while a dial tone is heard can be customized for easy use. The numbers must not conflict. It is also possible to use default (Pattern 1 or Pattern 2) shown in the following table:
   a. **Extension Numbers:** Extension numbers consist of leading numbers and additional numbers. Extension numbers (consisting of "0" through "9") can be assigned as follows:
      - Numbering schemes: 1-64
      - Leading number: up to three digits
      - Additional number: up to two digits (default: two digits)

      [Example]
      If the number "3" is programmed as a leading number for the 1st extension numbering scheme, and "XX" is programmed as the additional digits, extension numbers 300 through 399 are available.

   b. **Feature Numbers:** Up to four digits, consisting of 0-9, "✳", and "#"

   c. **Other PBX Extension Numbers (Other PBX Extension Number [TIE] 01 through 16):** Up to three digits, consisting of 0-9, "✳", and "#"

[Flexible Numbering Table (available while a dial tone is heard)]

Feature	Default		
	Pattern 1 (with ✳)		Pattern 2 (without ✳)
	KX-NCP500 KX-NCP1000 KX-TDE100 KX-TDE200	KX-TDE600	
Extension Numbering Scheme 1—Leading Number	1	10	10
Extension Numbering Scheme 2—Leading Number	2	11	11
Extension Numbering Scheme 3—Leading Number	3	12	12
Extension Numbering Scheme 4—Leading Number	4	13	13
Extension Numbering Scheme 5—Leading Number	None	14	14
Extension Numbering Scheme 6—Leading Number	None	15	15
Extension Numbering Scheme 7—Leading Number	None	16	16
Extension Numbering Scheme 8—Leading Number	None	17	17
Extension Numbering Scheme 9—Leading Number	None	18	18

Feature	Default		
	Pattern 1 (with ✳)		Pattern 2 (without ✳)
	KX-NCP500 KX-NCP1000 KX-TDE100 KX-TDE200	KX-TDE600	
Extension Numbering Scheme 10—Leading Number	**None**	**19**	**None**
Extension Numbering Scheme 11—Leading Number	**None**	**20**	**20**
Extension Numbering Scheme 12—Leading Number	**None**	**21**	**21**
Extension Numbering Scheme 13—Leading Number	**None**	**22**	**22**
Extension Numbering Scheme 14—Leading Number	**None**	**23**	**23**
Extension Numbering Scheme 15—Leading Number	**None**	**24**	**24**
Extension Numbering Scheme 16—Leading Number	**None**	**25**	**25**
Extension Numbering Scheme 17—Leading Number	**None**	**26**	**26**
Extension Numbering Scheme 18—Leading Number	**None**	**27**	**27**
Extension Numbering Scheme 19—Leading Number	**None**	**28**	**28**
Extension Numbering Scheme 20—Leading Number	**None**	**29**	**None**
Extension Numbering Scheme 21—Leading Number	**5**	**5**	**19**
Extension Numbering Scheme 22—Leading Number	**6**	**6**	**29**
Extension Numbering Scheme 23–64—Leading Number	**None**	**None**	**None**
Operator Call*1	**0**	**0**	**0**
Idle Line Access (Local Access)*1	**9**	**9**	**9**
Trunk Group Access*1	**8**	**8**	**8**
TIE Line Access*1	**7**	**7**	**None**
Redial*1	**#**	**#**	**#**
Speed Dialing—System/Personal*1	✳✳	✳✳	✳
Personal Speed Dialing—Programming*1	✳**30**	✳**30**	**30**
Doorphone Call*1	✳**31**	✳**31**	**31**
Conference Group Call	✳**32**	✳**32**	**None**
Group Paging	✳**33**	✳**33**	**33**
External BGM on/off*1	✳**35**	✳**35**	**35**
Outgoing Message (OGM) playback/record/clear	✳**36**	✳**36**	**36**
S-CO Line Access*1	✳**37**	✳**37**	**37**

Feature	Default		
	Pattern 1 (with ✳)		Pattern 2 (without ✳)
	KX-NCP500 KX-NCP1000 KX-TDE100 KX-TDE200	KX-TDE600	
SVM—Personal Greeting Message playback/record/clear[*1]	✳38	✳38	None
Parallel Telephone Mode set/cancel	✳39	✳39	39
Group Call Pickup	✳40	✳40	40
Directed Call Pickup	✳41	✳41	41
TAFAS—Calls through an External Pager	✳42	✳42	42
Group Paging answer	✳43	✳43	43
Automatic Callback Busy cancel/CCBS cancel	✳46	✳46	46
User Remote Operation/Walking COS/Verification Code Entry[*1]	✳47	✳47	47
Wireless XDP Parallel Mode set/cancel	✳48	✳48	48
Account Code Entry[*1]	✳49	✳49	49
Call Hold/Call Hold Retrieve	✳50	✳50	50
Call Hold Retrieve—Specified with a Holding Extension Number	✳51	✳51	51
Call Park/Call Park Retrieve	✳52	✳52	52
Call Hold Retrieve—Specified with a Held CO Line Number	✳53	✳53	53
Door Open	✳55	✳55	55
External Relay	✳56	✳56	56
External Feature Access	✳60	✳60	60
SIP Refer (Blind)	✳61	✳61	61
Preventing (not showing) the telephone number when making outside calls (KX-HGT100 only)[*2]	✳67		
Showing the telephone number when making outside calls (KX-HGT100 only)[*2]	✳68		
COLR set/cancel[*1]	✳7✳0	✳7✳0	7✳0
CLIR set/cancel[*1]	✳7✳1	✳7✳1	7✳1
Switch CLIP of the CO Line/Extension[*1]	✳7✳2	✳7✳2	7✳2
Message Waiting set/cancel/callback[*1]	✳70	✳70	70
FWD/DND set/cancel—Both[*1]	✳710	✳710	710

Feature	Default		
	Pattern 1 (with ✳)		Pattern 2 (without ✳)
	KX-NCP500 KX-NCP1000 KX-TDE100 KX-TDE200	KX-TDE600	
FWD/DND set/cancel—External*1	✳711	✳711	711
FWD/DND set/cancel—Internal*1	✳712	✳712	712
FWD/DND No Answer Timer set*1	✳713	✳713	713
Group FWD set/cancel—Both*1	✳714	✳714	714
Group FWD set/cancel—External*1	✳715	✳715	715
Group FWD set/cancel—Internal*1	✳716	✳716	716
Call Pickup Deny set/cancel*1	✳720	✳720	720
Paging Deny set/cancel	✳721	✳721	721
Walking Extension/Enhanced Walking Extension	✳727	✳727	727
Data Line Security set/cancel	✳730	✳730	730
Manual Call Waiting for Extension Call off/BSS/OHCA/ Whisper OHCA	✳731	✳731	731
Automatic Call Waiting set/cancel	✳732	✳732	732
Executive Busy Override Deny set/cancel	✳733	✳733	733
Not Ready Mode on/off*1	✳735	✳735	735
Log-in/Log-out*1	✳736	✳736	736
Incoming Call Queue Monitor	✳739	✳739	739
Hot Line program/set/cancel	✳740	✳740	740
Absent Message set/cancel*1	✳750	✳750	750
BGM set/cancel	✳751	✳751	751
Remote Wake-up Call	✳76✳	✳76✳	76✳
Timed Reminder set/cancel	✳760	✳760	760
Printing Message	✳761	✳761	761
Extension Dial Lock set/cancel*1	✳77	✳77	77
Time Service Switch*1	✳780	✳780	780
Remote Extension Dial Lock off*1	✳782	✳782	782
Remote Extension Dial Lock on*1	✳783	✳783	783
NDSS Monitor Release (Centralized BLF Monitor Cancel)	✳784	✳784	784

Feature	Default		
	Pattern 1 (with ✳)		Pattern 2 (without ✳)
	KX-NCP500 KX-NCP1000 KX-TDE100 KX-TDE200	KX-TDE600	
Extension Feature Clear[*1]	✳790	✳790	790
Extension Personal Identification Number (PIN) set/ cancel[*1]	✳799	✳799	799
Dial Information (CTI)	None	None	None
Other PBX Extension Number (TIE) 01–16	None	None	None
Quick Dialing 1–80[*3]	None	None	None

[*1] SIP extension users can use these feature numbers. If these feature numbers do not work properly with the KX-HGT100, ensure that the firmware of the KX-HGT100 and the MPR software file version of the PBX are updated to their latest versions.

[*2] These settings are unrelated to PBX feature numbers and are set directly via the telephone. If the number set to the telephone is also used as a PBX feature number, the number functions as the telephone's feature number, and not as a PBX feature number. See 4.6.1 Registering IP Telephones in the IP Networking Guide for programming details.

[*3] It is possible to register Quick Dialing numbers that overlap with other registered numbers. This is used for the Automatic Rerouting of VoIP Calls To Public CO Line feature.

2. Flexible Numbering (available while a busy, DND, or ringback tone is heard)

Feature numbers which are available while a busy, DND, or ringback tone is heard can be customized for easy use. The numbers should be one digit (0-9, "✳", or "#") and must not conflict. For a list of the default settings, refer to the following table:

[Flexible Numbering Table (available while a busy, DND, or ringback tone is heard)]

Feature	Default
Call Waiting/DND Override[*1]	1 or 2[*2]
Executive Busy Override	3
Message Waiting set[*1]	4
Call Monitor	5
Automatic Callback Busy	6
Alternate Calling—Ring/Voice	✳

[*1] SIP extensions cannot perform DND Override or Message Waiting but can be the recipient of them.

[*2] To use Call Waiting/DND Override, both "1" and "2" are available by default.

3. Fixed Numbering (available while dialing or talking)

Features which are available while dialing or talking have fixed numbers, as shown in the following table:

[Fixed Numbering Table (available while dialing or talking)]

Feature	Fixed Numbering
Pulse to Tone Conversion	✳

Feature	Fixed Numbering
Conference[*1]	**3**
Door Open	**5**

[*1] SIP extensions cannot establish conferences but can participate in them.

Conditions

- The following are examples of feature number conflicts: 1 and 11, 0 and 00, 2 and 21, 10 and 101, 32 and 321, etc.
- **Feature number + Additional number (Parameter)**
  Certain flexible feature numbers require additional digits to make the feature active. For example, to set Call Waiting, the feature number for "Call Waiting" must be followed by "1" and to cancel it, the same feature number should be followed by "0".
- Rotary single line telephone (SLT) users cannot dial feature numbers which include "✳" or "#".
- Portable station (PS) users cannot use the following features:
  – Personal Speed Dialing
  – OGM playback/record
  – S-CO Line Access
  – Parallel Telephone Mode set/cancel
  – Walking Extension
  – BGM set/cancel
  – Timed Reminder

PC Programming Manual References

4.9 [2-6-1] Numbering Plan—Main
→Extension
→Features
→Other PBX Extension
4.10 [2-6-2] Numbering Plan—Quick Dial
4.11 [2-6-3] Numbering Plan—B/NA DND Call Feature

PT Programming Manual References

[100] Flexible Numbering

Feature Manual References

13.1.27 PS (Portable Station)
19.1.3 Voice Mail (VM) Group
21.1 Capacity of System Resources

Operating Manual References

4.2.1 Feature Number Table

6.1.5 Floating Extension

Description

Virtual extension numbers can be assigned to resources to make them as easily accessible as extensions. These numbers are referred to as "floating extension numbers" and can be assigned as a destination of incoming calls, intercepted calls, etc.
This feature is also known as Floating Station.

Resource		Description	Default
Device	**External Pager**	Used as the destination for the Trunk Answer From Any Station (TAFAS) feature. (→ 17.1.2 TAFAS (Trunk Answer From Any Station))	600
	Outgoing Message (OGM)	Used to play messages for callers via the Direct Inward System Access (DISA) feature. (→ 4.1.8 DISA (Direct Inward System Access))	5 + two-digit OGM number
	Simplified Voice Message (SVM)	Used to access message boxes associated with extensions. (→ 16.1.9 SVM (Simplified Voice Message))	SVM card 1: 591 SVM card 2: 592
	Analog Remote Maintenance	Used to access PC programming mode through a modem on a PC.	599
Group	**Incoming Call Distribution (ICD) Group**	Used to call an ICD group. (→ 9.1.1 ICD GROUP FEATURES)	6 + two-digit group number
	PS Ring Group	Used to call a PS ring group. (→ 13.1.31 PS—Ring Group)	—
	VM (DPT) Group	Used to call a VM (DPT) group.	500 (VM [DPT] Group 1)
	VM (DTMF) Group	Used to call a VM (DTMF) group.	—

Conditions

- Certain resources which are assigned a floating extension number can also be assigned a name.

PC Programming Manual References

4.9 [2-6-1] Numbering Plan—Main—Extension
5.12 [3-5-1] Incoming Call Distribution Group—Group Settings—Main
→◆ Floating Extension Number
→◆ Group Name
5.19 [3-7-2] VM(DPT) Group—Unit Settings—◆ Floating Extension No.
5.22 [3-8-2] VM(DTMF) Group—Group Settings—◆ Floating Ext. No.
5.24 [3-9] PS Ring Group—◆ Floating Extension Number
7.2 [5-2] External Pager—◆ Page Number 1, Page Number 2—Floating Extension Number
7.4 [5-3-2] Voice Message—DISA Message—◆ Floating Extension Number
13.1 [11-1] Main—Remote—◆ Remote—Analog Remote (Modem) Floating Extension Number

PT Programming Manual References

[623] Incoming Call Distribution Group Name
[660] VM Group Floating Extension Number
[700] External Pager Floating Extension Number
[730] Outgoing Message (OGM) Floating Extension Number
[731] Outgoing Message (OGM) Name
[811] Modem Floating Extension Number
[812] ISDN Remote Floating Extension Number

Feature Manual References

13.1.6 PC Programming
19.1.3 Voice Mail (VM) Group

6.1.6 FWD (Call Forwarding)

Description

Extensions and incoming call distribution groups can forward their calls to preset destinations. There are several different types of forwarding, and the circumstances under which the calls are forwarded for each type differ as follows:

Type	Circumstance
All Calls	Any time **Follow Me:** When an extension user fails to set this feature before leaving the desk, this feature can be set from the destination extension.
Busy	When the extension user's line is busy.
No Answer	When the extension user does not answer within a preprogrammed time.
Busy/No Answer	When the extension user's line is busy or the user does not answer within a preprogrammed time.

Depending on the type of incoming intercom or CO line calls, it is possible to set a different destination for each.

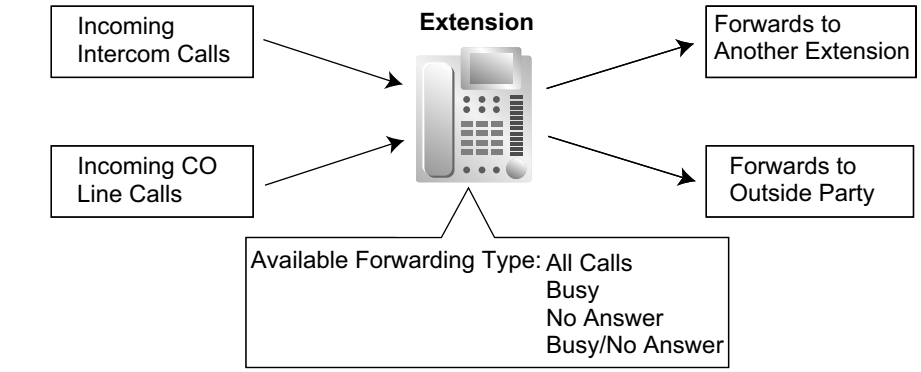

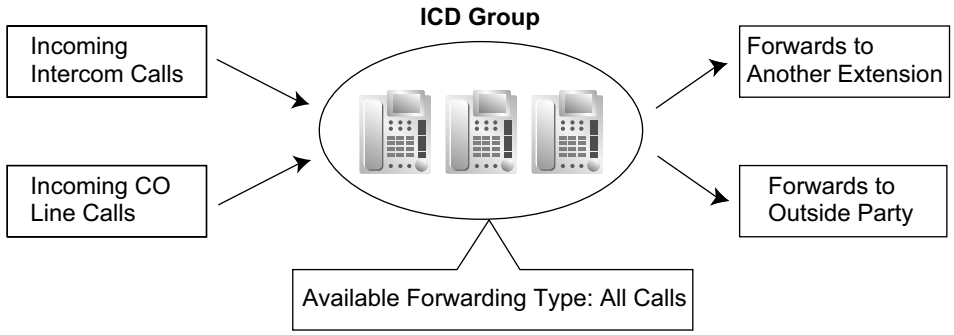

[Available Destinations]

Destination	Availability	Condition for Original Extension/ Incoming Call Distribution Group
Wired Extension (PT/SLT/SIP Extension/ T1-OPX)	✓	Only available when FWD to extension is allowed through COS programming.*1
PS	✓	
ICD Group	✓	
PS Ring Group	✓	–
Floating Extension no. for SVM	✓	–
VM Group (DTMF/DPT)	✓	–
External Pager (TAFAS)	✓	–
DISA	✓	Only available for incoming CO line calls. Incoming intercom and doorphone calls cannot be forwarded to a DISA floating extension number.
Analog/ISDN Remote Maintenance	✓	–
Idle Line Access no. + Phone no.	✓	Only available when FWD to CO line is allowed through COS programming.
Trunk Group Access no. + Trunk Group no. + Phone no.	✓	

Destination	Availability	Condition for Original Extension/ Incoming Call Distribution Group
Extension of Another PBX (via TIE Line, Access with PBX Code)	✓	Only available when FWD to CO line is allowed through COS programming.
Extension of Another PBX (via TIE Line, Access without PBX Code)	✓	–

*1 If an extension user is not permitted by COS to call a certain extension (→ 9.1.14 Internal Call Block), the FWD feature will not function if that extension is set as the forwarding destination.

Parallel Ringing When Forwarding to CO Line

When an unanswered call is forwarded to an outside line, such as a cellular phone, the forwarding extension's phone will continue ringing until the forwarded call is answered at either phone. This feature can be enabled for each extension through system programming. Even when the outside destination answers the call, DSS buttons for the forwarding extension are displayed as busy. The Intercept Routing feature is available for when parallel ringing is not answered.

Conditions

[General]

- **FWD for CO Line Calls/Intercom Calls**
  The extension user can set the FWD feature for CO line calls, for intercom calls, or for both.
- **FWD from Incoming Call Distribution Group (Group FWD)**
  COS programming determines the incoming call distribution groups that can use this feature.
- **FWD to CO Line**
  COS programming determines the extensions or incoming call distribution groups that can forward calls externally.
  The original extension's Toll Restriction and ARS still apply to the forwarded call.
- **CO Line Call Duration**
  The duration of a CO line call can be restricted by a system timer. CO line call duration is assigned separately for calls between an extension user and an outside party, and calls between two outside parties. If the timer expires, the line will be disconnected. (→ 3.1.18 CO Line Call Limitation)
- **Multiple FWD**
  Calls can be forwarded up to four times. The following forwarding features are counted as Multiple FWD:
  – FWD—Busy or Busy/No Answer (when the destination extension is busy), or All Calls
  – Idle Extension Hunting—Overflow
  – Intercept Routing—Busy/DND (when the destination extension is busy or in DND mode)
  – Incoming Call Distribution Group—Overflow

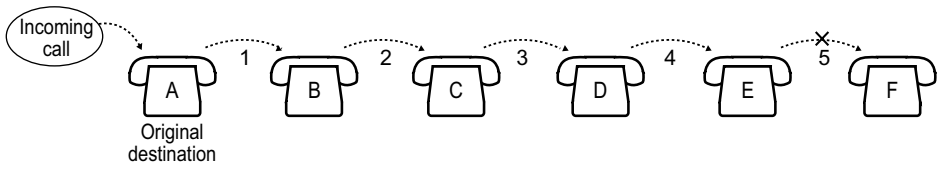

In the above illustration, forwarding stops at extension E. However, forwarding can go farther in the following cases:

– If a destination extension rings, and then the call is redirected to the forward destination by the FWD—No Answer or Busy/No Answer feature.

– If a destination extension rings, and then the call is redirected to the intercept destination by the Intercept Routing—No Answer feature.
– If a call waits in a queue of an incoming call distribution group, and then the call is redirected to the overflow destination by the Queuing Time Table. (→ 9.1.6 ICD Group Features—Queuing)

In the above cases, the forwarding counter resets to zero, and the call can be forwarded up to four times again from the destination extension described above.

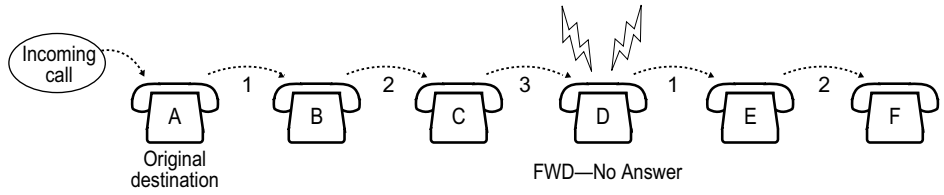

- **Boss & Secretary feature**
  It is possible to call the original extension from the destination extension regardless of the forward setting.

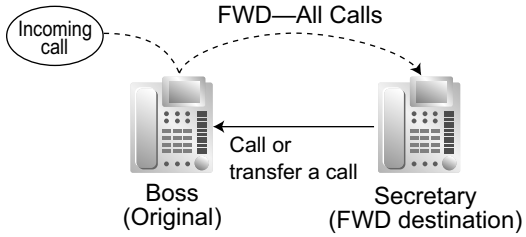

- **Message Waiting**
  While calls are forwarded, Message Waiting information is not forwarded. The Message button light turns on at the originally called extension. (→ 11.1.3 Message Waiting)
- **Idle Extension Hunting**
  Idle Extension Hunting applies to calls forwarded to a busy extension in an idle extension hunting group.

[All Calls and Busy]

- If the forward destination is not available to answer a call, this feature is canceled and the original destination will ring for the following type of call:
  – Doorphone call
  – CO line calls via the ELCOT/LCOT or T1 (LCOT/GCOT) cards

[No Answer and Busy/No Answer]

- **No Answer Time**
  The number of rings before the call is forwarded is programmable for each extension.

[Follow Me]

- This feature is only available when the original extension has set "◆ **Remote Operation by Other Extension**" to "**Allow**" through COS programming.

[Parallel Ringing When Forwarding to CO Line]

- A KX-NCS3910, KX-NCS4910 or KX-NCS4950 (Activation Key for Software Upgrade to Enhanced Version) is required to use this feature.
- If an extension goes on-hook while transferring a call to an extension ringing in parallel with a CO line, the CO line will stop ringing for a moment, then begin ringing again.
- This feature is not available for channels of a T1 CO line set to LCOT type.
- This feature may not be available depending on the specifications of the telephone network.

PC Programming Manual References

4.9 [2-6-1] Numbering Plan—Main—Features—◆ FWD No Answer Timer Set
4.12 [2-7-1] Class of Service—COS Settings
→CO & SMDR—◆ Call Forward to CO
→Manager—◆ Group Forward Set
→Optional Device & Other Extensions—◆ Remote Operation by Other Extension
5.1 [3-1-1] Trunk Group—TRG Settings—Main
→◆ CO-CO Duration Time (*60s)
→◆ Extension-CO Duration Time (*60s)
5.12 [3-5-1] Incoming Call Distribution Group—Group Settings—Group Log / Group FWD
6.1 [4-1-1] Wired Extension—Extension Settings—FWD / DND
6.3 [4-1-2] Wired Extension—FWD/DND
6.10 [4-2-1] Portable Station—Extension Settings— FWD / DND Reference
6.12 [4-2-2] Portable Station—FWD/DND

PT Programming Manual References

[472] Extension-to-CO Line Call Duration
[473] CO-to-CO Line Call Duration
[504] Call Forwarding to CO Line
[605] Call Forwarding—No Answer Time

Feature Manual References

3.1.23 COS (Class of Service)
9.1.5 ICD Group Features—Overflow
9.1.9 Idle Extension Hunting
9.1.11 Intercept Routing

Operating Manual References

1.3.30 FWD (Call Forwarding)

6.1.7 FWD/DND Button, Group FWD Button

Description

The FWD/DND fixed button, or a customized flexible button, can display the FWD/DND setting status of the extension. Using this button, the FWD status and DND status of the extension can be temporarily set or canceled without clearing FWD destination settings.

FWD/DND Button Types

Multiple types of FWD/DND buttons can be customized on an extension.

Type		Description
FWD/DND for Extension	FWD/DND—Internal	Works for incoming intercom calls
	FWD/DND—External	Works for incoming CO line calls
	FWD/DND—Both	Works for all incoming calls

[Button Status]

The FWD/DND button shows the current status as follows:

Light Pattern	Status (default)
Red on	DND on
Slow red flashing	FWD on
Off	FWD/DND off

The functions assigned to the "on" and "flashing" patterns can be changed through system programming.

Group FWD Button Types

The FWD feature for the incoming call distribution group can be customized on a flexible button. Multiple types of Group FWD buttons can be customized on an extension.

Type		Description
FWD for Incoming Call Distribution Group	Group FWD—Internal	Works for incoming intercom calls
	Group FWD—External	Works for incoming CO line calls
	Group FWD—Both	Works for all incoming calls

[Button Status]

The Group FWD button shows the current status as follows:

Light Pattern	Status (default)
Red on	FWD on
Off	FWD off

FWD/DND Setting by Fixed FWD/DND button

Pressing the fixed FWD/DND button in idle status allows the extension user to set the following items for FWD/DND:

- FWD/DND for CO line calls
  The FWD/DND status for CO line calls to that extension can be switched temporarily without clearing the FWD destination. During setting, the LED of the button shows the current CO line call FWD/DND status. The forwarding type and destination for CO line calls can also be set.
- FWD/DND for intercom calls
  The FWD/DND status for intercom calls to that extension can be switched temporarily without clearing the FWD destination. During setting, the LED of the button shows the current intercom call FWD/DND status. The forwarding type and destination for intercom calls can also be set.
- FWD—No Answer timer
  The length of time until unanswered calls are forwarded can be modified. This setting is applied to both intercom and CO line call forwarding.
- FWD for Virtual PS
  If the extension is the first registered extension in an Incoming Call Distribution Group, the extension user can set the FWD destination and forwarding status (on/off) for up to 4 virtual PSs preregistered to the group. (→ 19.1.2 Virtual PS)

These settings are only available when FWD/DND buttons are set through system programming to FWD/DND Setting mode.

Conditions

- When FWD/DND buttons are set to FWD/DND Cycle Switch mode, pressing the FWD/DND button cycles the FWD/DND setting.
  In this mode, when intercom calls are set to be handled differently from CO line calls (forwarding type, forward destination, DND on/off):
  a. in idle mode, the light patterns of the FWD/DND—Both button (including FWD/DND button [fixed button]) and the Group FWD—Both button will indicate the setting for either CO line calls or intercom calls, but not both.
  b. the FWD and DND icons on a PS display reflect the settings for CO line calls only.
  c. pressing the FWD/DND—Both button (including FWD/DND button [fixed button]) or the Group FWD—Both button will be ignored.
- When both the FWD and DND features are assigned simultaneously, pressing the button changes the settings as follows:

- A FWD/DND button customized on a flexible button is always in FWD/DND Cycle Switch mode, and the mode cannot be changed.

PC Programming Manual References

4.9 [2-6-1] Numbering Plan—Main—Features
→◆ FWD/DND Set / Cancel: Call from CO & Extension
→◆ FWD/DND Set / Cancel: Call from CO
→◆ FWD/DND Set / Cancel: Call from Extension
→◆ Group FWD Set / Cancel: Call from CO & Extension
→◆ Group FWD Set / Cancel: Call from CO
→◆ Group FWD Set / Cancel: Call from Extension
4.18 [2-9] System Options—Option 1
→◆ PT Fwd / DND—Fwd LED
→◆ PT Fwd / DND—DND LED
→◆ PT Fwd / DND—Fwd/DND key mode when Idle
6.1 [4-1-1] Wired Extension—Extension Settings—FWD / DND
6.5 [4-1-4] Wired Extension—Flexible Button
→◆ Type
→◆ Extension Number (for Group Fwd (Both))
→◆ Extension Number (for Group Fwd (External))
→◆ Extension Number (for Group Fwd (Internal))
6.10 [4-2-1] Portable Station—Extension Settings— FWD / DND Reference
6.13 [4-2-3] Portable Station—Flexible Button
→◆ Type
→◆ Extension Number (for Group Fwd (Both))
→◆ Extension Number (for Group Fwd (External))
→◆ Extension Number (for Group Fwd (Internal))
6.18 [4-3] DSS Console
→◆ Type
→◆ Extension Number (for Group Fwd (Both))
→◆ Extension Number (for Group Fwd (External))
→◆ Extension Number (for Group Fwd (Internal))

Feature Manual References

6.1.1 Fixed Buttons
6.1.3 Flexible Buttons

Operating Manual References

3.1.2 Personal Programming

Section 7

Features and Configurations—G

7.1 G

7.1.1 GROUP FEATURES

Description

This PBX supports various types of groups.

1. **Trunk Group**
   CO lines can be grouped into trunk groups based on carrier, CO line type, etc. Several settings can be assigned on a trunk group basis. All CO lines belonging to a trunk group follow the programming for that trunk group.
   → 5.1 [3-1-1] Trunk Group—TRG Settings
   → [402] LCOT Trunk Group Number
   Each CO line can belong to only one trunk group. CO lines are assigned to a trunk group based on their port numbers (for ELCOT/LCOT and PRI cards) or their channel numbers (for T1 cards).
2. **Extension User Group**
   Extensions can be grouped into extension user groups. Extension user groups then compose the following groups:
   a. Tenant (→ 17.1.3 Tenant Service)
   b. Call Pickup Group (See below.)
   c. Paging Group (See below.)
   Every extension must belong to one extension user group and cannot belong to more than one extension user group.
   → 5.6 [3-2] Extension Group
   → [603] Extension User Group
   Assignable Extensions: Proprietary telephone (PT)/single line telephone (SLT)/portable station (PS)/ T1-OPX

[Example]

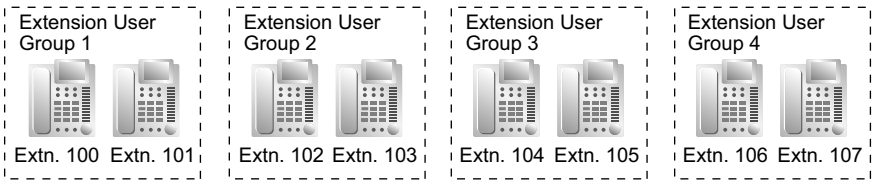

Call Pickup Group

Using the Group Call Pickup feature, extensions can answer any calls within the call pickup group to which they belong. One extension user group can belong to several call pickup groups. (→ 3.1.9 Call Pickup)
→ 5.7 [3-3] Call Pickup Group
→ 5.8 [3-3] Call Pickup Group—All Setting
→ [650] Extension User Groups of a Pickup Group

[Example]

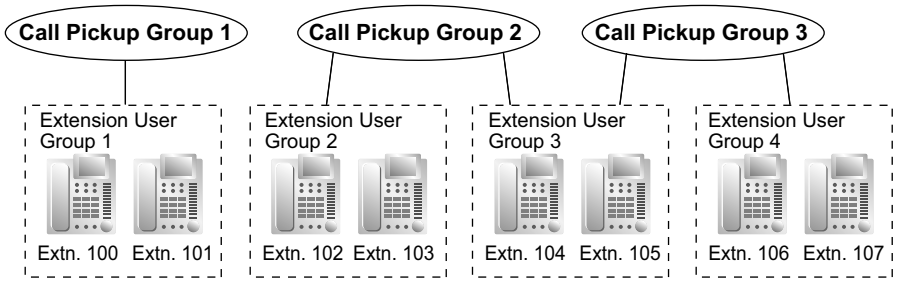

Paging Group

Using the Paging feature, extensions can make a page to any paging group or answer a page to their own groups. One extension user group or external pager (loudspeaker) can belong to several paging groups. (→ 13.1.1 Paging)
→ 5.9 [3-4] Paging Group
→ 5.10 [3-4] Paging Group—All Setting
→ 5.11 [3-4] Paging Group—External Pager
→ [640] Extension User Groups of a Paging Group

[Example]

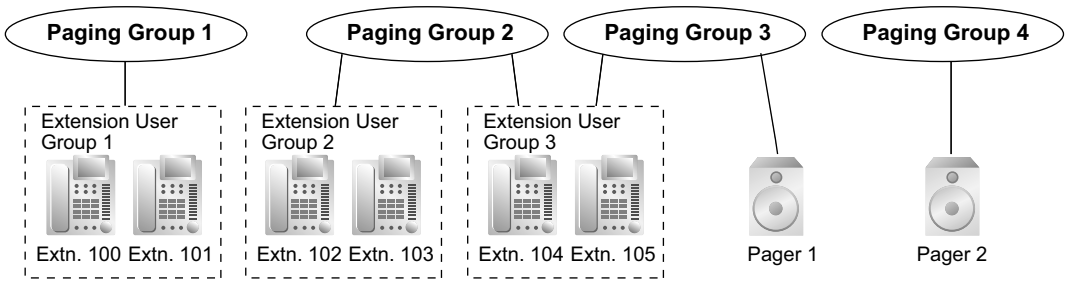

3. **Idle Extension Hunting Group**
   If a called extension is busy or in Do Not Disturb (DND) mode, Idle Extension Hunting redirects the incoming call to an idle member of the same idle extension hunting group. Members are programmed through system programming. When calls are received, idle extensions are automatically searched for according to a preprogrammed hunting type: Circular Hunting or Terminated Hunting. (→ 9.1.9 Idle Extension Hunting)
   → 5.16 [3-6] Extension Hunting Group
   → 5.17 [3-6] Extension Hunting Group—Member List
   → [680] Idle Extension Hunting Type
   → [681] Idle Extension Hunting Group Member
4. **Incoming Call Distribution Group (ICD Group)**
   An ICD group is a group of extensions which receives incoming calls directed to the group. Each ICD group has a floating extension number (default: 6 + two-digit group number) and name. One extension can belong to multiple ICD groups.
   → 5.12 [3-5-1] Incoming Call Distribution Group—Group Settings
   → 5.13 [3-5-1] Incoming Call Distribution Group—Group Settings—Member List
   → [623] Incoming Call Distribution Group Name
   Assignable Extensions: PT/SLT/PS/T1-OPX/PS ring group
   (→ 9.1.1 ICD GROUP FEATURES)

[Example]

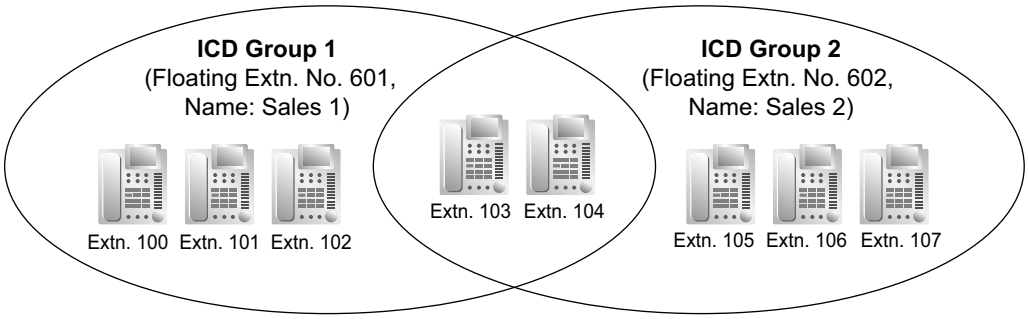

5. VM Group

There are two types of VM groups, explained below.

Type	Description
VM (DPT) Group	A group of DPT ports which use Voice Mail DPT (Digital) Integration features. One DPT port can belong to only one group.
VM (DTMF) Group	A group of SLT ports which use Voice Mail DTMF Integration features. One SLT port can belong to only one group.

(→ 19.1.3 Voice Mail (VM) Group)
→ 5.18 [3-7-1] VM(DPT) Group—System Settings
→ 5.19 [3-7-2] VM(DPT) Group—Unit Settings
→ 5.21 [3-8-1] VM(DTMF) Group—System Settings
→ 5.22 [3-8-2] VM(DTMF) Group—Group Settings
→ 5.23 [3-8-2] VM(DTMF) Group—Group Settings—Member List
→ [660] VM Group Floating Extension Number

[Example]

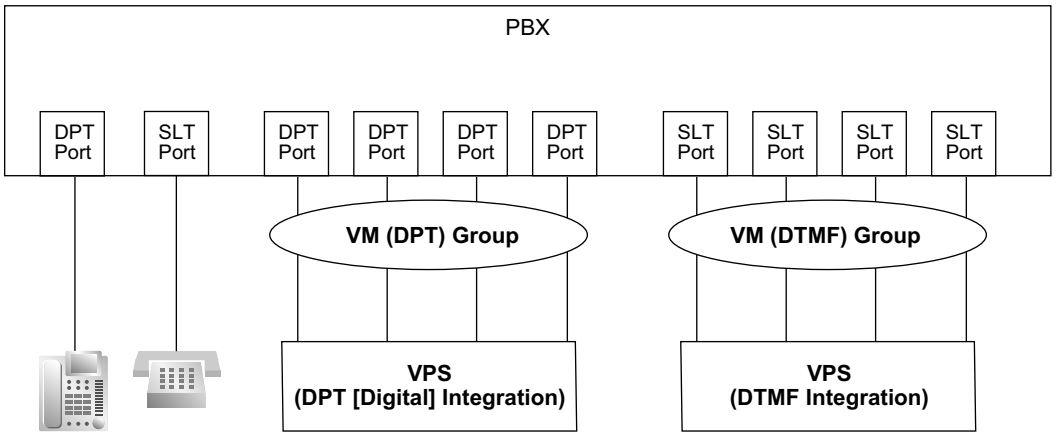

6. PS Ring Group

A PS ring group is a group of PS extensions which receives incoming calls directed to the group. Each group has a floating extension number and name assigned through system programming. One PS can belong to multiple PS ring groups. (→ 13.1.31 PS—Ring Group)
5.24 [3-9] PS Ring Group

5.25 [3-9] PS Ring Group—Member List

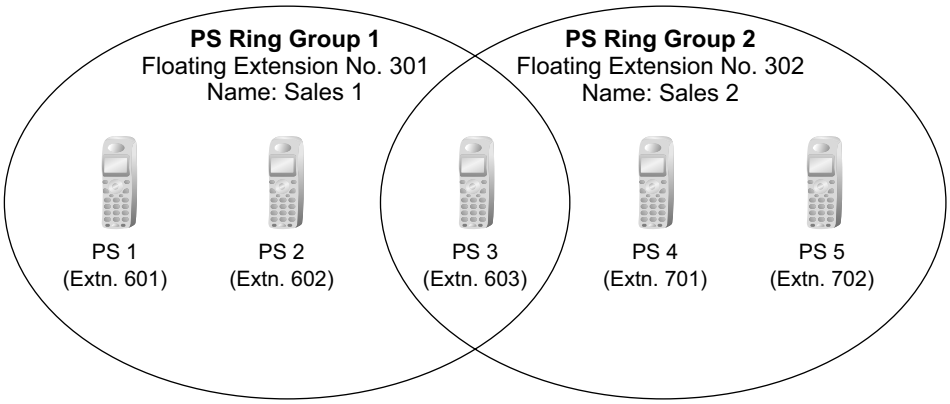

PC Programming Manual References

Section 5 [3] Group

PT Programming Manual References

[402] LCOT Trunk Group Number
[603] Extension User Group
[620] Incoming Call Distribution Group Member
[622] Incoming Call Distribution Group Floating Extension Number
[623] Incoming Call Distribution Group Name
[640] Extension User Groups of a Paging Group
[650] Extension User Groups of a Pickup Group
[660] VM Group Floating Extension Number
[680] Idle Extension Hunting Type
[681] Idle Extension Hunting Group Member

Feature Manual References

21.1 Capacity of System Resources

Section 8

Features and Configurations—H

8.1 H

8.1.1 Hands-free Answerback

Description

A proprietary telephone (PT) user with a speakerphone or optional headset can talk to a caller without lifting the handset. If the user receives a call in Hands-free Answerback mode, a hands-free conversation is established in the following method:

Type	Answering Method
Intercom Call	Established immediately after a beep tone at the called extension and the caller hears a confirmation tone.
CO Line Call	Established after a specified number of rings, a called extension hears a beep tone.

Class of Service (COS) with Hands-free Answerback

Hands-free Answerback can be enabled only for specific callers based on the caller's COS setting. For example, a nurse could call a room and the called extension will answer automatically so that the nurse can check on the occupant of the room. However, other intercom calls would ring even if Hands-free Answerback was set. Walking COS can also be used with this feature.

Conditions

- **Hands-free Answerback applies to:**
  Intercom calls and CO line calls, including calls directed to an incoming call distribution group (ICD) in UCD or Priority Hunting distribution method. (→ 9.1.2 ICD Group Features—Group Call Distribution)
- **Hands-free Answerback for CO Line Calls**
  System programming is required to use this feature.
- **Hands-free Answerback for Calls From an Extension That Placed a CO Line Call on Consultation Hold**
  Calls from an extension that placed a CO line call on Consultation Hold can be treated by this feature as either intercom calls or CO line calls, depending on system programming. If treated as intercom calls, the call will be established immediately.
  When transferring a call from an analog CO line, users are strongly recommended to perform a screened transfer, so that the outside caller is not automatically connected to an extension using Hands-free Answerback when the extension user is absent.
  Extensions that perform unscreened transfers often, such as operators, should have the Class of Service with Hands-free Answerback feature disabled. Otherwise, transferred outside calls may be automatically connected by Hands-free Answerback, even when the transfer destination is absent.
- **Secret Monitor**
  The beep tone heard by the called party before answering can be eliminated through system programming.
- **Alternate Receiving/Calling Mode (Ring/Voice) Override**
  Hands-free Answerback overrides the Alternate Receiving mode preset on the telephone and the Alternate Calling mode from the caller.
- **Hands-free Answerback with Headset**
  The Hands-free Answerback feature can also be used with a headset.

PC Programming Manual References

4.5 [2-3] Timers & Counters—Dial / IRNA / Recall / Tone—◆ Tone Length—Reorder Tone for PT Hands-free
4.12 [2-7-1] Class of Service—COS Settings—Assistant—◆ Automatic Answer (Caller)
4.18 [2-9] System Options
→Option 1—◆ PT Operation—Automatic Answer for Call from CO after
→Option 3—◆ Confirmation Tone—Tone 2 : Paged / Automatic Answer
→Option 4—◆ Transfer—Automatic Answer for Transferred Call
6.1 [4-1-1] Wired Extension—Extension Settings
→Option 5—◆ Automatic Answer for CO Call
→Option 6—◆ Forced Automatic Answer

Feature Manual References

3.1.23 COS (Class of Service)
9.1.13 Intercom Call

Operating Manual References

1.3.31 Hands-free Answerback

8.1.2 Hands-free Operation

Description

A proprietary telephone (PT) user can talk to another party without lifting the handset. Pressing specific buttons, such as REDIAL, automatically activate hands-free mode.

Conditions

- **PTs with the MONITOR Button**
  PTs with the MONITOR button can dial in hands-free mode but cannot have hands-free conversations.

PC Programming Manual References

4.5 [2-3] Timers & Counters—Dial / IRNA / Recall / Tone—◆ Tone Length—Reorder Tone for PT Hands-free
6.1 [4-1-1] Wired Extension—Extension Settings—Option 4—◆ LCS Answer Mode

8.1.3 Headset Operation

Description

This PBX supports headset compatible proprietary telephones (PTs). A PT user can talk to another party hands-free and without lifting the handset by using an optional headset.
For connection and operation, refer to the Operating Instructions for the headset.
This feature is also known as Handset/Headset Selection.

Conditions

- If headset mode is on, pressing the SP-PHONE button activates the headset, not the built-in speaker.

- To set the headset mode on a DPT or IP-PT, use personal programming (Headset Operation) or press the Headset button. To set headset mode on an analog proprietary telephone (APT), use the handset/headset selector located on the telephone and/or on the headset.
- **Headset Button**
  Any flexible button on a DPT or IP-PT can be customized as the Headset button. The Headset button can be also assigned to a flexible button on an APT, but the button will have no function.
- **Answer/Release Button**
  A flexible button can be customized as an Answer button or a Release button. Such buttons are useful for headset operation. It is possible to answer an incoming call by pressing the Answer button. While hearing a call waiting tone during a conversation, pressing the Answer button enables one to answer the second call by placing the current call on hold. Pressing the Release button enables one to disconnect the line during or after conversation, or to complete a Call Transfer.
- It is possible to change from headset mode to hands-free mode or vice versa during a conversation by pressing the Headset button.
- Headset users cannot use the following features:
  – Automatic Redial (→ 15.1.1 Redial, Last Number)
  – Receiving the Off-hook Call Announcement (OHCA) (→ 12.1.3 OHCA (Off-hook Call Announcement))
  – Receiving Whisper OHCA (→ 20.1.4 Whisper OHCA)
- When a Bluetooth® wireless headset and a KX-NT307(PSLP1528) Bluetooth Module are used with a KX-DT343/KX-DT346 DPT to make and receive calls using analog CO lines, the EECHO or ECHO card is required.

Installation Manual References

KX-NCP500/KX-NCP1000

3.7.4 ECHO16 Card (KX-TDA0166)

KX-TDE100/KX-TDE200

3.7.4 ECHO16 Card (KX-TDA0166)

KX-TDE600

3.9.6 EECHO16 Card (KX-TDA6166)

PC Programming Manual References

3.24 [1-1] Slot—Port Property - Extension Port—◆ Headset OFF/ON
3.43 [1-1] Slot—Port Property - IP-Extension Port (KX-TDE series only)—IP-PT Registration and De-registration—◆ Headset OFF/ON
6.5 [4-1-4] Wired Extension—Flexible Button—◆ Type
6.18 [4-3] DSS Console—◆ Type

Feature Manual References

6.1.3 Flexible Buttons

Operating Manual References

1.3.33 Headset Operation
3.1.2 Personal Programming

8.1.4 HOSPITALITY FEATURES

Description

This PBX has several features that support its use in a hotel-type environment, where extensions correspond to guest rooms.

Feature	Description	Details in
Room Status Control	An extension designated as the hotel operator can set the check-in status of rooms remotely.	→ 15.1.3 Room Status Control
Remote Wake-up Call	An extension designated as the hotel operator can set a timed reminder for a room remotely.	→ 17.1.4 Timed Reminder
SMDR for External Hotel Application	Hospitality feature data, including check-in, check-out, and timed reminder times, can be output to SMDR for use in a PC-based hotel application.	→ 16.1.4 SMDR (Station Message Detail Recording)

8.1.5 Host PBX Access Code (Access Code to the Telephone Company from a Host PBX)

Description

This PBX can be installed behind an existing PBX (host PBX) by connecting the extension ports of the host PBX to the CO line ports of this PBX (behind PBX). A Host PBX Access code is required for the behind PBX to access the telephone company (e.g., to make outside calls) through the host PBX. The CO line access number of the host PBX should be stored as a Host PBX Access code on a trunk group of the behind PBX. A preprogrammed Pause time will be automatically inserted between the user dialed Host PBX Access code and the subsequent digits (→ 13.1.4 Pause Insertion).

[Example]

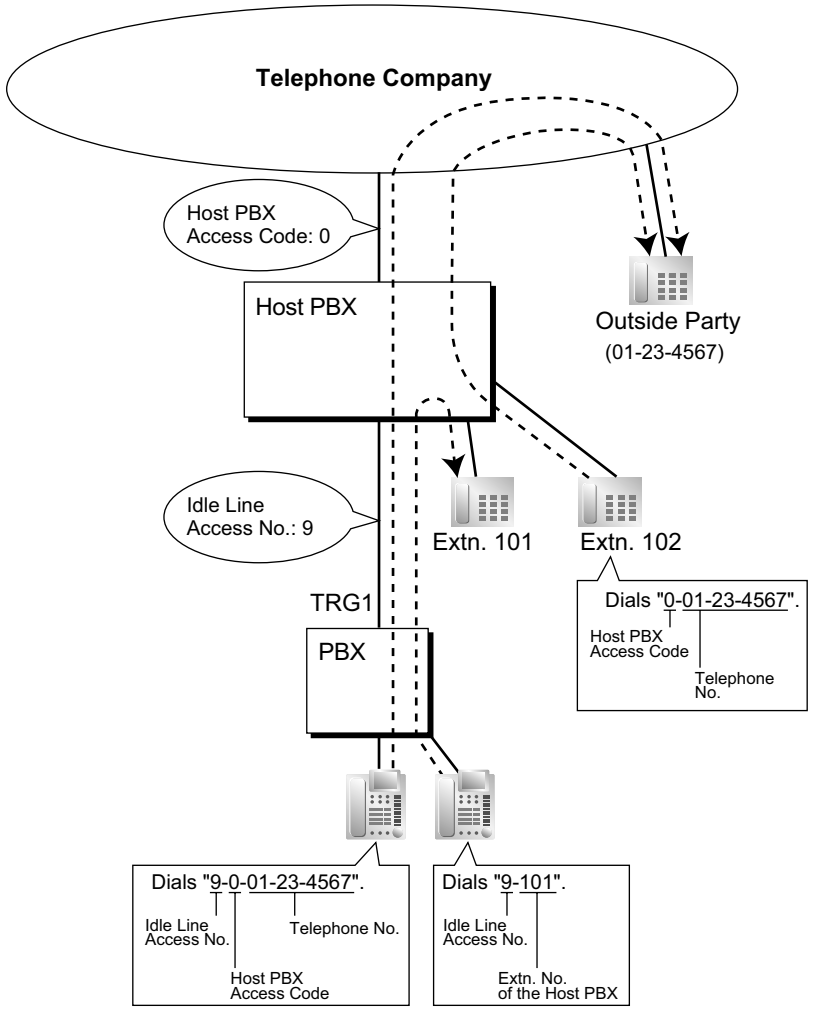

Note

In this example, "0" should be assigned as a Host PBX Access code for trunk group (TRG) 1 of this PBX.

Conditions

- **TRS**
  TRS checks only the dialed telephone number excluding the Host PBX Access code when accessing the telephone company through the host PBX. (→ 17.1.6 TRS (Toll Restriction))
- **ARS**
  A pause is not automatically inserted between the user-dialed access code and the subsequent digits when ARS mode is enabled. (→ 1.1.3 ARS (Automatic Route Selection))
- **SMDR**
  The dialed number including the Host PBX Access code will be recorded on Station Message Detailed Recording (SMDR) only if the modified number setting is selected in the ARS setting for SMDR.
- When a Host PBX Access code is assigned to a trunk group, calls to extensions of the host PBX are not recorded on SMDR.
- A Host PBX Access Code can be used to record only long distance calls on SMDR when a CO line port is connected directly to the telephone company (not a host PBX). This is allowed when the long distance code (e.g., "0") is assigned as the Host PBX Access code. All local calls (e.g., calls that do not require a

"0" to be dialed first) are treated as extensions of the telephone company and do not get recorded on SMDR, because in this case this PBX recognizes the telephone company as the host PBX. Therefore, only long distance calls are recorded on SMDR.

PC Programming Manual References

5.1 [3-1-1] Trunk Group—TRG Settings—Host PBX Access Code
13.1 [11-1] Main—SMDR Options—◆ Option—ARS Dial

PT Programming Manual References

[471] Host PBX Access Code

Feature Manual References

16.1.4 SMDR (Station Message Detail Recording)
21.1 Capacity of System Resources

8.1.6 Hot Line

Description

An extension user can make an outgoing call by simply going off-hook, if the user has previously stored the telephone number or the extension number.
If the Hot Line feature is set and the user goes off-hook, a dial tone is generated for a specified time assigned through system programming and then dialing starts. During this waiting time the user can dial another party, overriding the Hot Line feature.
This feature is also known as Pickup Dialing.

Conditions

- **Compatible Telephone**
  Proprietary telephone (PT), single line telephone (SLT), T1-OPX, and portable station (PS)

PC Programming Manual References

4.5 [2-3] Timers & Counters—Dial / IRNA / Recall / Tone—◆ Dial—Hot Line (Pickup Dial) Start
4.9 [2-6-1] Numbering Plan—Main—Features—◆ Hot Line (Pickup Dial) Program Set / Cancel
6.1 [4-1-1] Wired Extension—Extension Settings—Option 2
→◆ Pickup Dial Set
→◆ Pickup Dial No.
6.10 [4-2-1] Portable Station—Extension Settings—Option 2
→◆ Pickup Dial Set
→◆ Pickup Dial No.

PT Programming Manual References

[204] Hot Line Waiting Time

Feature Manual References

21.1 Capacity of System Resources

Operating Manual References

1.3.35 Hot Line

Section 9

Features and Configurations—I

9.1 I

9.1.1 ICD GROUP FEATURES

Description

An incoming call distribution group is a group of extensions programmed through system programming.
→ 5.13 [3-5-1] Incoming Call Distribution Group—Group Settings—Member List
→ [620] Incoming Call Distribution Group Member
An incoming call distribution group receives calls directed to the group. Each incoming call distribution group has a floating extension number (default: 6 + two-digit group number).
Incoming calls directed to an incoming call distribution group are distributed to the member extensions in the group using a distribution method. When a preprogrammed number of extensions in the group are busy, the incoming calls can wait in a queue.
Each incoming call distribution group and member extensions can be programmed as desired to handle incoming calls. Calls to the group can be monitored by an extension assigned as a supervisor.
5.12 [3-5-1] Incoming Call Distribution Group—Group Settings
→ Main
→ Overflow Queuing Busy
→ Overflow No Answer
→ Miscellaneous

A			B	C	D	E	F					
Group No.	Floating Extn. No.*1	Group Name*2	Distribution Method*3	Max. No. of Busy Extensions (No. of Agents)*4	Queuing Call Capacity*5	Hurry-up Level*6	Overflow Time*7	Overflow Destination*8				Tenant No.*9
								Day	Lunch	Break	Night	
1	601	Sales	Ring	3	5	3	60	100	103	100	100	1
2	602	Engineering	UCD	Max.	11	8	90	200	203	200	200	5
3												

*1 → [622] Incoming Call Distribution Group Floating Extension Number
*2 → [623] Incoming Call Distribution Group Name
*3 → [624] Incoming Call Distribution Group Distribution Method
*4 → [632] Maximum Number of Agents
*5 → [628] Queuing Call Capacity
*6 → [629] Queuing Hurry-up Level
*7 → [626] Overflow Time
*8 → [625] Destination for Overflow Time Expiration/[627] Destination When All Busy
*9 The tenant number is required to determine the time mode (day/lunch/break/night) (→ 17.1.5 Time Service) and the music source (for Music on Hold) for each group.

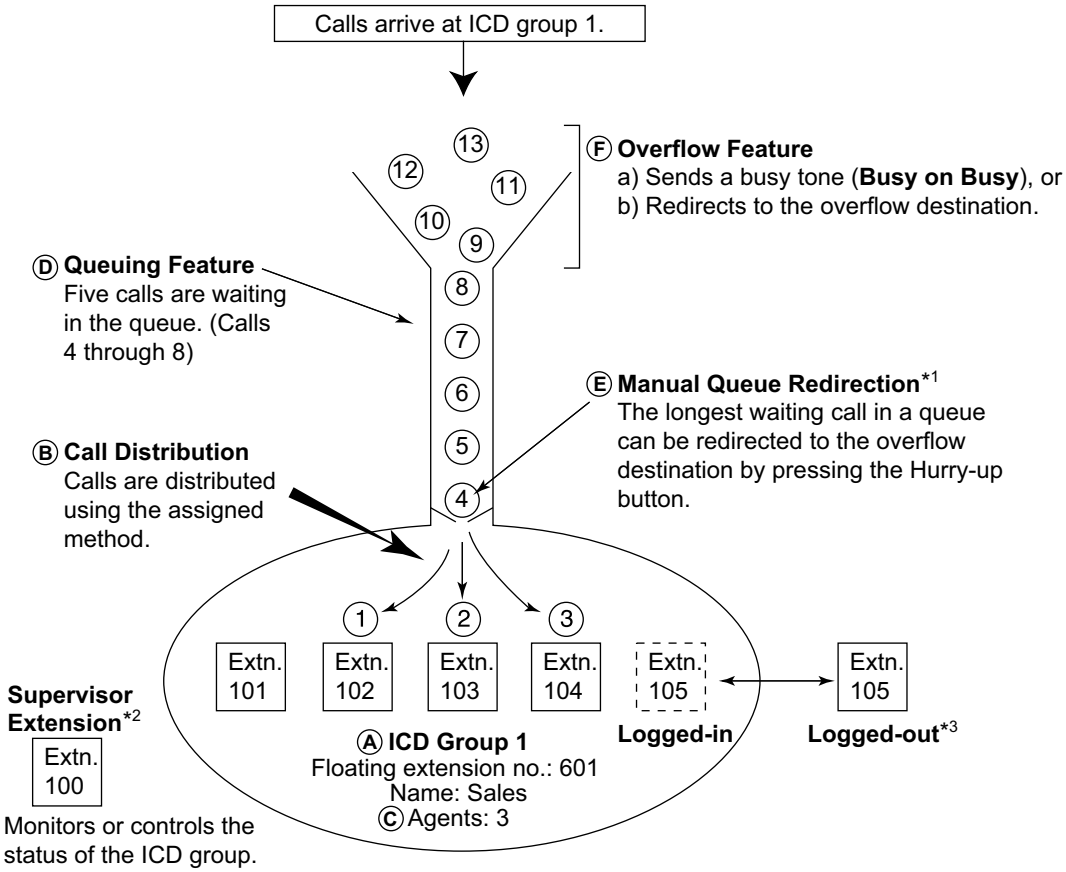

*1 → 9.1.6 ICD Group Features—Queuing
*2 → 9.1.7 ICD Group Features—Supervisory
*3 → 9.1.3 ICD Group Features—Log-in/Log-out

1. **Group Call Distribution** [→ 9.1.2 ICD Group Features—Group Call Distribution]
   Incoming calls are distributed using one of the following methods:

Distribution Method	Description
Uniform Call Distribution (UCD)	Calls are distributed evenly to a different extension each time a call is received.
Priority Hunting	An idle extension is searched for in the specified order, always starting from the same location.
Ring	All extensions in the incoming call distribution group ring simultaneously.

2. **Queuing Feature** [→ 9.1.6 ICD Group Features—Queuing]
   If a preprogrammed numbers of extensions in an incoming call distribution group are busy, a preprogrammed number of additional calls can wait in a queue.
   While calls are waiting in the queue, an outgoing message (OGM) or Music on Hold can be sent to the waiting callers.
3. **VIP Call** [→ 9.1.8 ICD Group Features—VIP Call]
   It is possible to assign a priority to incoming call distribution groups so that incoming calls can be received in priority order.
4. **Overflow Feature** [→ 9.1.5 ICD Group Features—Overflow]

A call is redirected to a preprogrammed destination when it cannot be answered or queued (**Intercept Routing—Overflow in an Incoming Call Distribution Group**). It is also possible to send a busy tone (**Busy on Busy**) or disconnect the line.

5. **Incoming Call Distribution Group Controlling Feature**

Feature		Description & Reference
Log-in/Log-out		Member extensions can join the group to handle calls (Log-in) or leave the group for a break (Log-out). They can leave the group temporarily when they are away from their desks, to prevent calls being sent to their extensions. → 9.1.3 ICD Group Features—Log-in/Log-out
Supervisory Feature	**Incoming Call Queue Monitor**	The supervisor extension can monitor various information about the incoming calls for each incoming call distribution group on his display. → 9.1.7 ICD Group Features—Supervisory
	Log-in/Log-out Monitor and Remote Control	**Monitor:** The supervisor extension can monitor the log-in/log-out status of the group members. **Remote Control:** The supervisor extension can change the status of the members. → 9.1.7 ICD Group Features—Supervisory

Conditions

- One extension can belong to multiple incoming call distribution groups.
- **ICD Group button**
  An Incoming Call Distribution (ICD) Group button can be assigned on a flexible button for each incoming call distribution group. It receives the incoming calls to the group.
  One extension can have more than one ICD Group button of the same or different incoming call distribution groups **(Multiple ICD Group)**. If all ICD Group buttons in the same incoming call distribution group are occupied, the next incoming call will be held in a queue or will overflow. If the ICD Group button is not assigned, incoming calls will arrive at the INTERCOM, CO or PDN button.
  The mode of ICD Group buttons can be selected through system programming, as follows:
  – Standard Mode (Group DN Button Mode)
    An extension can have an ICD Group button for an incoming call distribution group that the extension does not belong to through system programming. However, the ICD Group button will not receive calls to that group.
  – Enhanced Phantom Button Mode
    An extension can join an ICD Group just by creating a button for that group, even if the extension was not previously registered as a member. When the button is created, the extension will be automatically registered in the lowest-numbered available member slot for the group. Calls to the group can be received at the extension with no further programming. If no member slots are available for that group, the button cannot be created and an alarm tone will be heard.
    When creating an ICD Group button in this mode, the user can also specify the delayed ringing settings.
    If an extension user deletes the last ICD Group button at his extension for a certain group, he will also be deregistered as a member from that group.
- **Group FWD**

The FWD feature can be assigned on an incoming call distribution group basis.

- **COS for Incoming Call Distribution Groups**
  Each incoming call distribution group is assigned a COS number. Group FWD to an outside party can be enabled or disabled for each COS. The COS for incoming call distribution groups is also used for the Internal Call Block feature; when an extension user calls an incoming call distribution group, the PBX checks the COS of the calling extension against the COS of the incoming call distribution group (→ 9.1.14 Internal Call Block).

PC Programming Manual References

4.12 [2-7-1] Class of Service—COS Settings
→CO & SMDR—◆ Call Forward to CO
→Manager—◆ Group Forward Set
5.12 [3-5-1] Incoming Call Distribution Group—Group Settings
→Main
→Overflow Queuing Busy
→Overflow No Answer
→Miscellaneous
5.13 [3-5-1] Incoming Call Distribution Group—Group Settings—Member List
5.15 [3-5-3] Incoming Call Distribution Group—Miscellaneous—◆ Options—ICD Group Key Mode

PT Programming Manual References

[620] Incoming Call Distribution Group Member
[621] Incoming Call Distribution Group Delayed Ringing
[622] Incoming Call Distribution Group Floating Extension Number
[623] Incoming Call Distribution Group Name
[624] Incoming Call Distribution Group Distribution Method
[625] Destination for Overflow Time Expiration
[626] Overflow Time
[627] Destination When All Busy
[628] Queuing Call Capacity
[629] Queuing Hurry-up Level
[630] Queuing Time Table
[631] Sequences in Queuing Time Table
[632] Maximum Number of Agents

Feature Manual References

6.1.3 Flexible Buttons
6.1.6 FWD (Call Forwarding)
21.1 Capacity of System Resources

9.1.2 ICD Group Features—Group Call Distribution

Description

Incoming calls directed to an incoming call distribution group are distributed to the member extensions using the selected distribution method until a preprogrammed number of extensions (agents) are busy with calls. When incoming calls exceed the number of available extensions, calls enter a queue (→ 9.1.6 ICD Group Features—Queuing).

1. **Distribution Method**

One of the three distribution methods below can be assigned to each incoming call distribution group.

Distribution Method	Description
Uniform Call Distribution (UCD)	Calls are distributed evenly to a different extension each time a call is received. Extensions are hunted in a circular way in the preprogrammed order for the group, starting at the extension after the extension that received the last call. 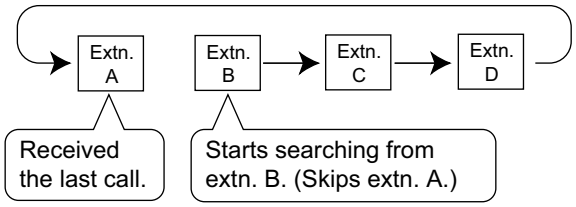
	Depending on system programming, calls can be directed to the longest idle extension. This is known as Automatic Call Distribution (ACD).
Priority Hunting	An idle extension is searched for using the preprogrammed order for the group. 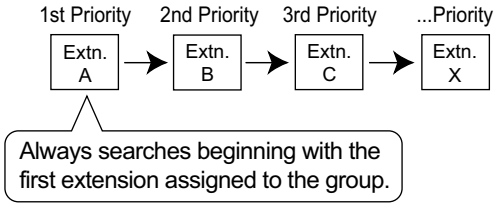
Ring	All extensions in the group ring simultaneously. **Delayed Ringing:** Delayed ringing or no ringing can be programmed for each extension in the group. The call can be answered by pressing the flashing button even if no ring or a delayed time is set. 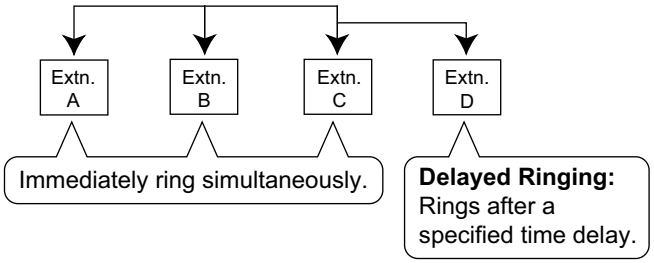

2. Call Waiting for Incoming Call Distribution Group (Group Call Waiting)

When there are no available extensions in an incoming call distribution group, the group members can receive the Call Waiting tone. To use this feature:

- Select the Group Call Waiting mode through system programming. This determines the distribution method for waiting calls.
- Member extensions must assign the Call Waiting mode individually, or they will not be notified. (→ 3.1.12 CALL WAITING FEATURES)

[How the Group Call Waiting Feature Activates]

Programming Conditions		Result	
Group Call Waiting Mode	**Group Call Distribution Method**	**Group Call Waiting Distribution Method**	**Capable Telephone**
Disable	UCD	UCD	PT/PS with idle ICD Group button
	Priority Hunting	Priority Hunting	
	Ring	Not available*	Any telephone
Enable	UCD/Priority Hunting/ Ring	Ring	

* Incoming calls enter the queue immediately. Member extensions do not receive the Call Waiting tone.

[Example]

• Group Call Waiting mode: Enable • Group call distribution method for idle extensions: UCD	→ All extensions hear the Call Waiting tone (Ring).

[ICD Group Button for Group Call Waiting]

The way that the Group Call Waiting feature works depends on the Group Call Waiting Distribution method as follows:

a. Ring: The Group Call Waiting feature activates for all busy member extensions (even when the extensions do not have ICD Group buttons) simultaneously for only one incoming call—additional calls will wait in a queue.

b. UCD/Priority Hunting: The Group Call Waiting feature activates on an idle ICD Group button located on busy member extensions in a certain order. (This order depends on the type: UCD or Priority Hunting.) Calls will arrive at idle buttons until all ICD Group buttons are occupied—additional calls will wait in a queue.

Note

In method b), if an extension has one or more ICD Group buttons for an incoming call distribution group and all the ICD Group buttons on the extension are occupied, the Group Call Waiting feature for the group will not work at the extension.

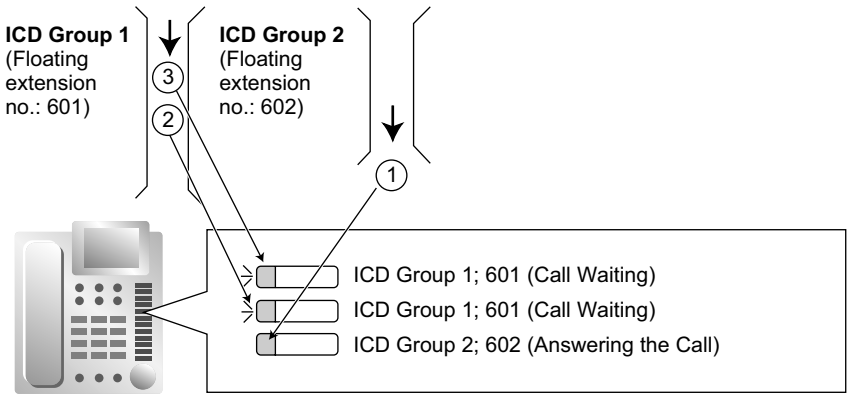

3. No Reply Redirection (UCD or Priority Hunting Method)

If a call received at a member extension is not answered within a preprogrammed time period (No Answer time), the call will be redirected to the next member extension. If there is no idle group member, the call queues at the target extension until a group member becomes available.

Conditions

- **Automatic Call Distribution (ACD)**
  When a KX-NCS3910, KX-NCS4910 or KX-NCS4950 (Activation Key for Software Upgrade to Enhanced Version) is installed in the PBX, and the distribution type is set to Uniform Call Distribution, it is possible to select whether incoming calls are distributed to idle extensions evenly in order (UCD), or to the extension that has been idle the longest (ACD).
- **FWD/DND Extension**
  System programming for each incoming call distribution group is required to skip or ring extensions which have the FWD or DND feature set. If set to ring, the FWD/DND settings are ignored. (→ 4.1.10 DND (Do Not Disturb), → 6.1.6 FWD (Call Forwarding))
- The Group Call Waiting feature cannot be used with the VIP Call feature (→ 9.1.8 ICD Group Features—VIP Call) and/or Wrap-up feature (→ 9.1.3 ICD Group Features—Log-in/Log-out). To use the VIP Call feature and/or Wrap-up feature, Call Waiting mode on each extension should be off.
- Delayed ringing does not function for SIP extensions. Even if delayed ringing is enabled, they will ring at the same time as other extensions.

PC Programming Manual References

5.1 [3-1-1] Trunk Group—TRG Settings—Main—◆ Line Hunting Order
5.12 [3-5-1] Incoming Call Distribution Group—Group Settings
→Main—◆ Distribution Method
→Main—◆ Call Waiting Distribution
→Miscellaneous—◆ Extension No Answer Redirection Time
→Miscellaneous—◆ Maximum No. of Busy Extension
5.13 [3-5-1] Incoming Call Distribution Group—Group Settings—Member List
5.15 [3-5-3] Incoming Call Distribution Group—Miscellaneous—◆ Options—Longest Idle Distribution (Activation Key Required)

PT Programming Manual References

[621] Incoming Call Distribution Group Delayed Ringing
[624] Incoming Call Distribution Group Distribution Method
[632] Maximum Number of Agents

9.1.3 ICD Group Features—Log-in/Log-out

Description

Members of an incoming call distribution group can join (Log-in) or leave (Log-out) the group manually. They can leave the group temporarily when they are away from their desks, to prevent calls being sent to their extensions. They can return to the group when they are ready to answer calls.

Wrap-up:

While logged in, a member extension can have a preprogrammed time period automatically for refusing calls after completing the previous call (Wrap-up time). While the Wrap-up timer is active, calls to all incoming call distribution groups to which the extension belongs will skip the extension so that the extension user can perform necessary tasks such as reporting on the previous call.
Wrap-up mode can also be activated manually (Not Ready) by pressing the Wrap-up button.

[Log-in/Log-out and Wrap-up Status Example]

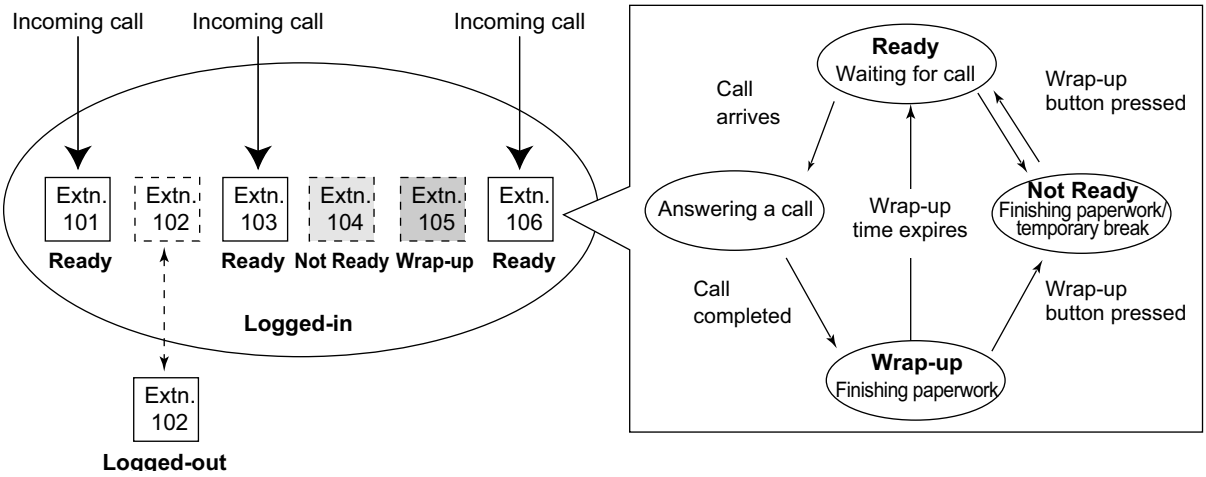

Conditions

- It is programmable whether the last remaining logged-in extension can log out.
- **Log-in/Log-out Button**
  A flexible button can be customized as the Log-in/Log-out button with the following parameters:

Parameter	Usage	Light Pattern	
		Red on	Off
No parameter	Used with an ICD Group button, or with the floating extension number of an incoming call distribution group, or with ✳ (All).	—	—
Floating extension number of a specified incoming call distribution group	Used to log in to or out of the specified incoming call distribution group.	Log-out Status	Log-in Status
✳ (All)	Used to log in to or out of all incoming call distribution groups to which the extension user belongs.	After Log-out Operation	After Log-in Operation

- If an ICD Group button is assigned, it also shows the log-in/log-out status of the corresponding group. The light pattern is the same as the Log-in/Log-out button that includes the group number.
- **Wrap-up Timer**
  - Two wrap-up timers can be programmed, an ICD Group member wrap-up timer and an extension wrap-up timer. System programming selects which timer is used. When the ICD Group member wrap-up timer is selected, the timer is only activated after calls to the extension through an ICD Group. When the extension wrap-up timer is selected, the timer is activated after all calls to or from the extension, including a retrieved call on hold.
  - Only calls from ICD Groups cannot be received during the wrap-up time. Other calls are received as normal.
  - The wrap-up timer does not work for SIP extensions or PS Ring Groups.
- **Wrap-up Button**

A flexible button can be customized as the Wrap-up button. It shows the current status as follows:

Light pattern	Status
Slow red flashing	Wrap-up
Red on	Not Ready
Off	Ready (Wrap-up mode cancel)

- When a PS in Wireless XDP Parallel Mode completes a call, neither the PS nor its wired telephone can have Wrap-up time. (→ 20.1.5 Wireless XDP Parallel Mode)
- **Automatic Log-out**
  A member extension may be logged out automatically, if the Unanswered time expires a preprogrammed number of times consecutively. The number of consecutive unanswered calls can be assigned for each incoming call distribution group. If the extension is a member of more than one incoming call distribution group, the unanswered number is counted across all corresponding incoming call distribution groups. It is possible to return to log-in mode manually.
  The Automatic Log-out feature does not work for extensions in an incoming call distribution group using the Ring distribution method (→ 9.1.2 ICD Group Features—Group Call Distribution).
- **Log-in/Log-out Monitor**
  The supervisor extension can monitor and control the log-in/log-out status of the incoming call distribution group members. (→ 9.1.7 ICD Group Features—Supervisory)
- **Log-in/Log-out Information on SMDR**
  Log-in/Log-out information can be printed out on SMDR. (→ 16.1.4 SMDR (Station Message Detail Recording))

PC Programming Manual References

4.9 [2-6-1] Numbering Plan—Main—Features
→◆ Log-in / Log-out
→◆ Not Ready (Manual Wrap-up) Mode On / Off
5.12 [3-5-1] Incoming Call Distribution Group—Group Settings—Miscellaneous
→◆ No. of Unanswered Calls for Automatic Log-out
→◆ Last Extension Log-out
5.13 [3-5-1] Incoming Call Distribution Group—Group Settings—Member List—◆ Wrap-up Timer
5.15 [3-5-3] Incoming Call Distribution Group—Miscellaneous—◆ Options—Wrap-up Timer based on
6.1 [4-1-1] Wired Extension—Extension Settings—Option 8—◆ Wrap-up Timer
6.5 [4-1-4] Wired Extension—Flexible Button
→◆ Type
→◆ Parameter Selection (for Log-in/Log-out)
→◆ Extension Number (for Log-in/Log-out)
6.10 [4-2-1] Portable Station—Extension Settings—Option 8—◆ Wrap-up Timer
6.13 [4-2-3] Portable Station—Flexible Button
→◆ Type
→◆ Parameter Selection (for Log-in/Log-out)
→◆ Extension Number (for Log-in/Log-out)
6.18 [4-3] DSS Console
→◆ Type
→◆ Parameter Selection (for Log-in/Log-out)
→◆ Extension Number (for Log-in/Log-out)
13.1 [11-1] Main—SMDR—◆ Print Information—Log-in / Log-out

Feature Manual References

6.1.3 Flexible Buttons

Operating Manual References

1.3.39 ICD Group Features—Log-in/Log-out

9.1.4 ICD Group Features—Outside Destinations

Description

Up to 4 outside parties or destinations at another PBX can be assigned as members of an Incoming Call Distribution (ICD) Group, using the following method: A virtual PS is registered as a member of the ICD Group. Then, the telephone number of the outside destination is specified as the FWD—All Calls destination. Calls to the ICD Group will also ring at the outside destination as if that destination were an extension within the PBX. This is useful in situations such as the following:

- An extension user can have his PT and multiple cellular phones ring together for calls.
- An employee who is not in the office, but is still available to answer calls, can receive calls to an ICD Group.

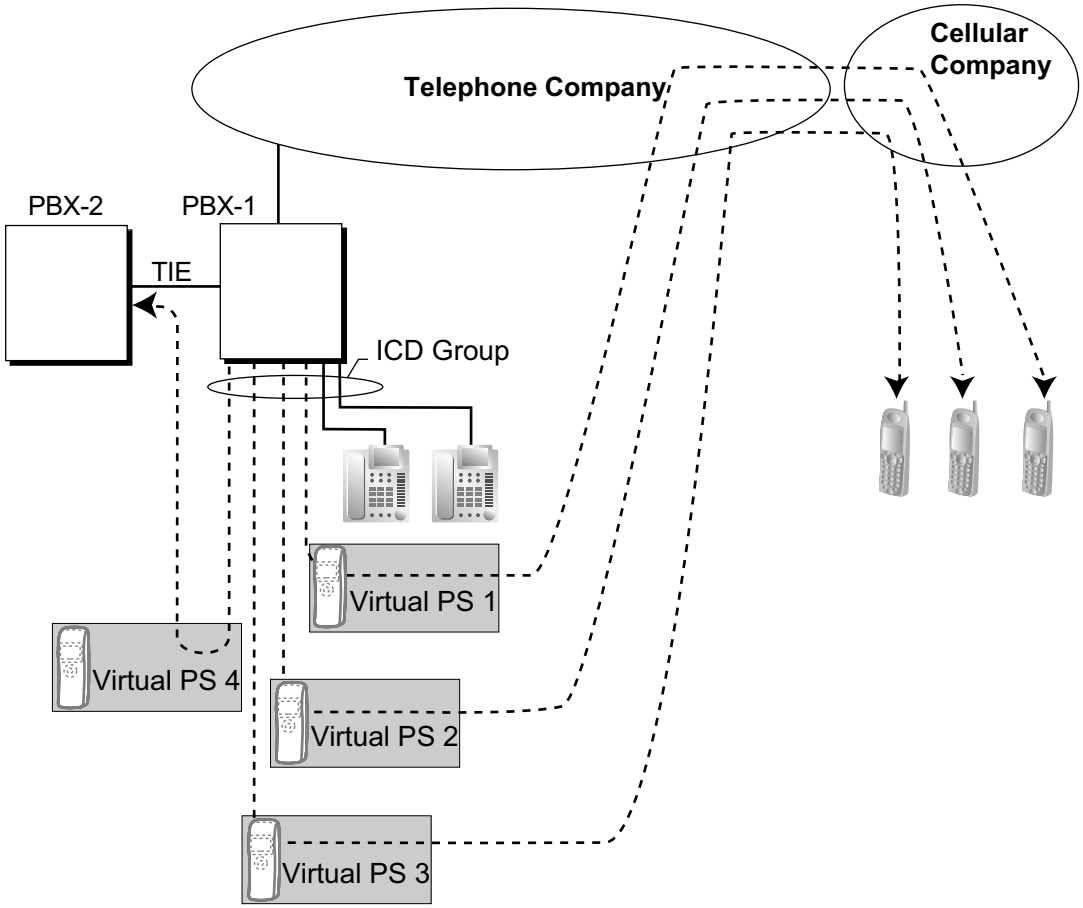

Cellular Phone XDP Parallel

The extension registered first in an ICD Group can program the Forward settings for CO line calls to up to 4 virtual PSs through PT programming. Using this feature, an extension user can assign his cellular phone to ring with his PT, so that he can easily receive CO line calls even when not at his desk.

Conditions

- The KX-NCS3910, KX-NCS4910 or KX-NCS4950 (Activation Key for Software Upgrade to Enhanced Version) is required to use this feature.
- For this feature to be activated, the following conditions must be met:
  – A virtual PS is assigned as a member of the ICD Group. (→ 19.1.2 Virtual PS)
  – The forwarding type of the virtual PS is set to All Calls. (→ 6.1.6 FWD (Call Forwarding))
  – The forwarding destination is an outside party, including an extension at another PBX in the network.
  – FWD to CO line is allowed through COS programming for the virtual PSs.
- Up to 4 virtual PSs can be assigned to a single ICD Group. If more than 4 are assigned, the 4 virtual PSs with the lowest member numbers are available.
- ELCOT/LCOT CO lines and channels of a T1 CO line set to LCOT do not support this feature.
- Calls to an ICD Group will ring at a virtual PS even if all of the other extensions assigned to the group are busy.
- If all members of an ICD Group are virtual PSs, and CO lines are available but the called parties are all busy, neither the queuing or overflow features will operate. Therefore, it is recommended that at least one PT or SLT is also assigned to an ICD Group.
- To log in to or out of a group, a virtual PS user can access the PBX through DISA, enter the Walking COS feature number (if required), and access log-in/log-out settings.
- Delayed ringing can be assigned for virtual PSs in the same way as for other extensions.
- The wrap-up time feature and Automatic Log-out feature are not available for virtual PSs.
- When forwarding calls to a public CO line, system programming selects whether the CLIP number of the calling party or of the virtual PS is sent to the forward destination.
  When calling using a private network, the CLIP number of the calling party will always be sent.
- **DSS button for Cellular Phone XDP Parallel**
  The DSS button light of the extension registered first in an ICD Group will turn red if the parallel cellular phone:
  – is on a CO line call that was received via the ICD Group.
  – is on a CO line call that was made using the Walking COS Through DISA feature. (→ 4.1.8 DISA (Direct Inward System Access))

PC Programming Manual References

3.47 [1-2] Portable Station—PS Registration and De-registration
4.12 [2-7-1] Class of Service—COS Settings—CO & SMDR—◆ Call Forward to CO
4.18 [2-9] System Options—Option 4
→◆ Send CLIP of CO Caller—when call is forwarded to CO
→◆ Send CLIP of Extension Caller—when call is forwarded to CO
5.12 [3-5-1] Incoming Call Distribution Group—Group Settings—Main
→◆ Floating Extension Number
→◆ Distribution Method
5.13 [3-5-1] Incoming Call Distribution Group—Group Settings—Member List
→◆ Extension Number
→◆ Delayed Ring
6.12 [4-2-2] Portable Station—FWD/DND

PT Programming Manual References

[620] Incoming Call Distribution Group Member
[621] Incoming Call Distribution Group Delayed Ringing
[622] Incoming Call Distribution Group Floating Extension Number
[624] Incoming Call Distribution Group Distribution Method
[690] PS Registration

Feature Manual References

13.1.18 Private Network Features—Network ICD Group
19.1.2 Virtual PS

9.1.5 ICD Group Features—Overflow

Description

When waiting calls exceed the waiting queue capacity, they may be redirected to a preprogrammed destination or a busy tone may be sent to the callers by the following features:

1. Intercept Routing—Overflow in an Incoming Call Distribution Group
2. Busy on Busy

1. **Intercept Routing—Overflow in an Incoming Call Distribution Group**
   Intercept Routing—Overflow in an Incoming Call Distribution Group works in one of following conditions:
   - **a.** There is no space in the waiting queue.
   - **b.** The Queuing Time Table is not assigned and there are no extensions logged in.
   - **c.** The Queuing Time Table is assigned, but there are no extensions logged in and the "Overflow immediately when All Logout" setting is enabled.
   - **d.** An Overflow command is assigned to the Queuing Time Table.
   - **e.** The Overflow time expires.
   - **f.** Manual Queue Redirection is performed.

   ### [Available Destination]

   The overflow destinations can be assigned for each incoming call distribution group and each time mode (day/lunch/break/night) (→ 17.1.5 Time Service). The destination can be assigned as follows, depending on the above conditions.

   - For a), b), and c):
     → 5.12 [3-5-1] Incoming Call Distribution Group—Group Settings—Overflow Queuing Busy—◆ Queuing Busy—Destination-Day, Lunch, Break, Night
     → [627] Destination When All Busy
   - For d), e), and f):
     → 5.12 [3-5-1] Incoming Call Distribution Group—Group Settings—Overflow No Answer—◆ Time out & Manual Queue Redirection—Destination-Day, Lunch, Break, Night
     → [625] Destination for Overflow Time Expiration

Destination	Availability
Wired Extension (PT/SLT/SIP Extension/T1-OPX)	✓
PS	✓
ICD Group	✓
PS Ring Group	✓
Floating Extension no. for SVM	✓
VM Group (DTMF/DPT)	✓
External Pager (TAFAS)	✓
DISA	✓
Analog/ISDN Remote Maintenance	✓

Destination	Availability
Idle Line Access no. + Phone no.	✓
Trunk Group Access no. + Trunk Group no. + Phone no.	✓
Extension of Another PBX (via TIE Line, Access with PBX Code)	✓
Extension of Another PBX (via TIE Line, Access without PBX Code)	✓

2. **Busy on Busy**
   The Busy on Busy feature works when the destination for the Intercept Routing—Overflow in an Incoming Call Distribution Group feature is not assigned in one of the following conditions:
   a. There is no space in the Waiting queue.
   b. The Queuing Time Table is not assigned and there are no extensions logged-in.

   [Example of a)]
   There are five assistants in a shop. When the answering agent number is "2", and the queuing call number is "0":
   If two of the assistants are talking on the phone, the next caller will hear a busy tone to prevent the caller from thinking that there is no one in the shop or that the shop is closed.

Conditions

[Intercept Routing—Overflow in an Incoming Call Distribution Group]

- **If the Overflow time expires, and the overflow destination is unavailable:**
  a. If the CO line call arrives through the ELCOT/LCOT or T1 (LCOT/GCOT) card:
  (1) If the call was once in a queue and an outgoing message (OGM) was sent to it, or the call reached an incoming call distribution group by using the DISA feature (→ 4.1.8 DISA (Direct Inward System Access)): The line is disconnected.
  (2) In all other cases: Redirection is ignored and the Overflow timer activates again.
  b. If the call arrives through another card: Redirection is ignored and the Overflow timer activates again.
- **If the Queuing Time Table is assigned and there are no members assigned to the group, queuing will occur even the "Overflow immediately when All Logout" setting is enabled:**

[Busy on Busy]

- If a CO line call arrives through the ELCOT/LCOT or T1 (LCOT/GCOT) card, a busy tone will not be sent to the caller.

PC Programming Manual References

5.12 [3-5-1] Incoming Call Distribution Group—Group Settings
→Overflow Queuing Busy
→Overflow No Answer
5.14 [3-5-2] Incoming Call Distribution Group—Queuing Time Table
5.15 [3-5-3] Incoming Call Distribution Group—Miscellaneous◆ Options—Overflow immediately when All Logout

PT Programming Manual References

[625] Destination for Overflow Time Expiration
[626] Overflow Time
[627] Destination When All Busy

[628] Queuing Call Capacity
[632] Maximum Number of Agents

Feature Manual References

9.1.6 ICD Group Features—Queuing

9.1.6 ICD Group Features—Queuing

Description

When a preprogrammed number of extensions in an incoming call distribution group are busy, additional incoming calls can wait in a queue. The number of calls which can wait in the queue is programmable. While calls are waiting in the queue, the calls are handled by the Queuing Time Table, which can be assigned for each time mode (day/lunch/break/night) (→ 17.1.5 Time Service). This PBX supports a specified number of Queuing Time Tables which each have a specified number of sequences (specific commands which are performed when a caller enters a queue). The following commands can be assigned to each sequence when making a Queuing Time Table:

[Command Table]

Command	Description	Condition
OGM xx	An outgoing message is sent to the caller. "xx" applies to the OGM number.	After the OGM, Music on Hold will be sent and the next event in the sequence will be activated.
Wait	The caller waits for the specified time while hearing a ringback tone or Music on Hold.	If an OGM has not been sent to the caller, the caller hears a ringback tone. If an OGM has been sent to the caller, the caller hears Music on Hold.
Sequence c	Redirects to sequence c. "c" applies to the sequence number.	None
Overflow	Redirects to the overflow destination.	None
Disconnect	Disconnects the line.	None
None (No command)	Redirects to the next sequence.	If assigned as sequence 01, the Queuing Time Table will not be activated.

[Programming Example of Queuing Time Table]

Queuing Time Table No.	Sequence*1				
	Sequence 01	**Sequence 02**	**Sequence 03**	**Sequence 04**	**...**
01	OGM 01	Wait 30 s	OGM 03	Overflow	
02*2	OGM 02	Wait 30 s	OGM 04	None	
03					

Queuing Time Table No.	Sequence*1				
	Sequence 01	Sequence 02	Sequence 03	Sequence 04	...
:	:	:	:	:	:

*1 → 5.14 [3-5-2] Incoming Call Distribution Group—Queuing Time Table—◆ Queuing Sequence—Sequence 01–16 → [631] Sequences in Queuing Time Table

*2 If a call has not reached a destination by the time the final sequence is completed, the call will be disconnected.

Explanation for Queuing Time Table 01:

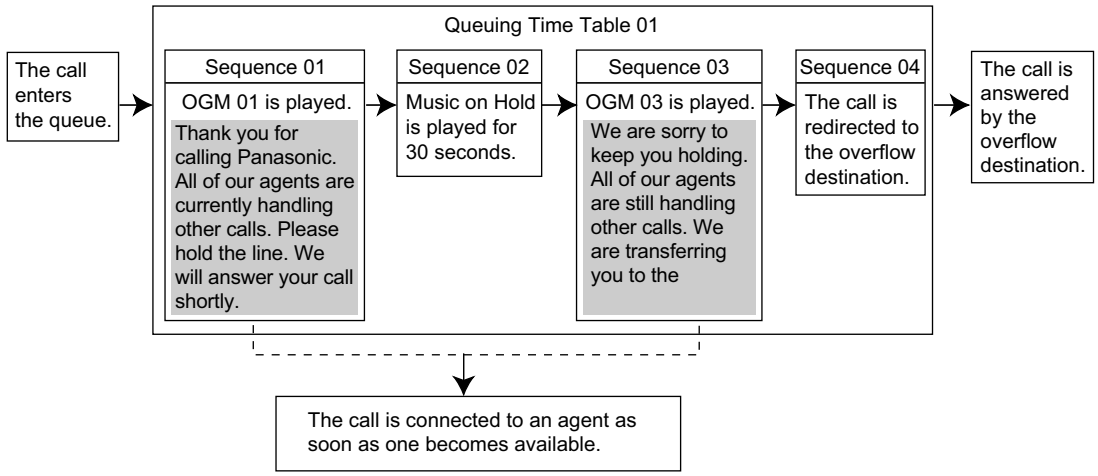

Exit from Queuing

If DISA Automated Attendant settings (→ 4.1.8 DISA (Direct Inward System Access)—DISA Built-in Automated Attendant Number (DISA AA Service)) are assigned to an OGM used in the Queuing Time Table, the caller can dial a digit while listening to the OGM and be redirected to the destination assigned to that digit.
For example, programming the VM group floating extension number as DISA AA number 1 for an OGM allows a caller to be redirected to voice mail:
(OGM) "Thank you for calling. The department you are calling is busy. Please hold, or press 1 to leave a voice message."
If the caller presses 1 while the OGM is playing, she will be redirected to voice mail where she can leave a voice message.

Conditions

- **If the call is transferred to the incoming call distribution group and is handled by the Queuing Time Table:**
  Transfer Recall will not occur even if the Transfer Recall time expires.
- **Manual Queue Redirection**
  It is possible to redirect the longest waiting call in a queue to the overflow destination by pressing the Hurry-up button. (If the call is already ringing at an extension, it will not be redirected.)
  This feature is also known as Hurry-up Transfer.
- **Hurry-up Button**
  A flexible button can be customized as the Hurry-up button. The number of calls queuing before Manual Queue Redirection may be performed is programmable. The button shows the current status as follows:

Light Pattern	Calls in the Waiting Queue
Off	No queued call

Light Pattern	Calls in the Waiting Queue
Red on	At or under the assigned number for Hurry-up
Rapid red flashing	Over the assigned number for Hurry-up

PC Programming Manual References

4.9 [2-6-1] Numbering Plan—Main—Features—◆ Incoming Call Queue Monitor
5.12 [3-5-1] Incoming Call Distribution Group—Group Settings
→Overflow Queuing Busy
→Overflow No Answer
→Queuing Time Table
→Miscellaneous—◆ Extension No Answer Redirection Time
→Miscellaneous—◆ Maximum No. of Busy Extension
5.14 [3-5-2] Incoming Call Distribution Group—Queuing Time Table
5.18 [3-7-1] VM(DPT) Group—System Settings—◆ Call Waiting on VM Group
5.21 [3-8-1] VM(DTMF) Group—System Settings—◆ Others—Call Waiting on VM Group
6.5 [4-1-4] Wired Extension—Flexible Button
→◆ Type
→◆ Extension Number (for Hurry-up)
6.13 [4-2-3] Portable Station—Flexible Button
→◆ Type
→◆ Extension Number (for Hurry-up)
6.18 [4-3] DSS Console
→◆ Type
→◆ Extension Number (for Hurry-up)

PT Programming Manual References

[628] Queuing Call Capacity
[629] Queuing Hurry-up Level
[630] Queuing Time Table
[631] Sequences in Queuing Time Table
[632] Maximum Number of Agents

Feature Manual References

6.1.3 Flexible Buttons
9.1.5 ICD Group Features—Overflow
12.1.2 OGM (Outgoing Message)
21.1 Capacity of System Resources

Operating Manual References

1.3.41 ICD Group Features—Manual Queue Redirection

9.1.7 ICD Group Features—Supervisory

Description

An extension preprogrammed as a supervisor (supervisor extension) can monitor and control each member's status within the incoming call distribution group using a 6-line display PT.

Feature	Description
Incoming Call Queue Monitor	The supervisor extension can monitor the status of an incoming call distribution group with the display.
Log-in/Log-out Monitor and Remote Control	**Monitor:** The supervisor extension can monitor the log-in/log-out status of the incoming call distribution group members through the corresponding DSS button light. **Remote Control:** The supervisor extension can change the status of the members by pressing the corresponding DSS button.

[Example]

<Incoming Call Queue Monitor Display>

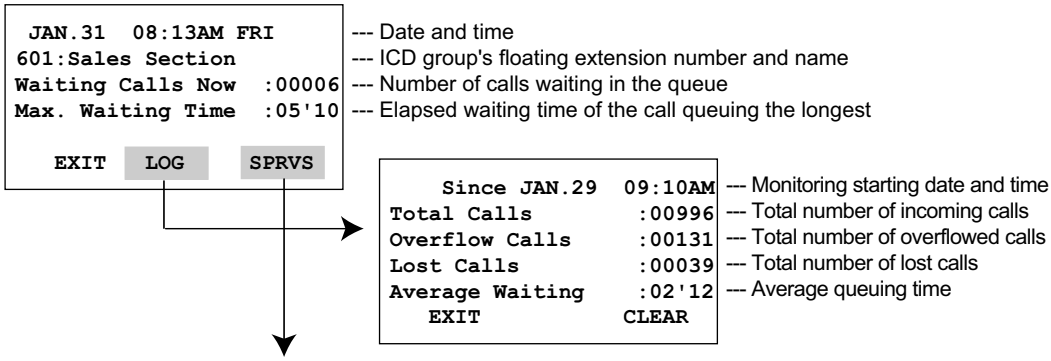

<Log-in/Log-out Monitor/Remote Control Mode with DSS Button light>

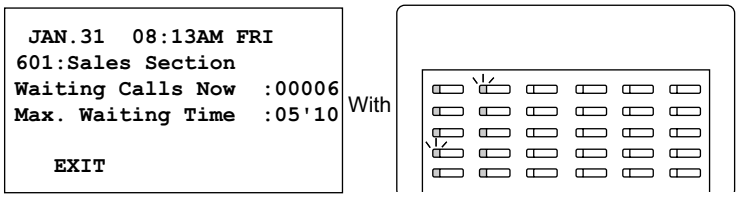

Log-in/Log-out Monitor
DSS buttons show the status of the corresponding group members.

Light pattern	Status
Green on	Log-in (Ready)
Slow Green Flashing	Log-in (Not Ready)
Red on	Log-out
Off	Extension in another ICD group

Log-in/Log-out Remote Control
Pressing a DSS button changes the extension's status as follows:

Status	Light pattern
Log-out	Red on
Log-in (Ready)	Green on

Conditions

- **Available Extension as a Supervisor Extension**

a. One supervisor extension can be assigned for each incoming call distribution group, but it need not belong to the group.
b. One extension can be the supervisor extension of more than one incoming call distribution group.

- **Available Paired DSS Console**
  This feature is available for the KX-T7640, KX-T7440, and KX-T7441.
- **Accumulation Value Clear**
  Accumulation value data (total incoming calls, total overflowed calls, lost calls, average queuing time) can be cleared manually. The date and time of clearing is saved and is shown on the display (monitoring starting date and time). When the value exceeds 99999 before clearing, "*****" will be shown.
- **If a call to an incoming call distribution group is overflowed:**
  If the display is in idle status, it will change to monitor mode for the corresponding incoming call distribution group automatically.
  If the display is monitoring another incoming call distribution group, it will not change.
- **Other Features while in Monitor Mode**
  The supervisor can use other features on the extension (making calls, pressing the MESSAGE button, etc.) even while in monitor mode. When each operation is finished, his telephone returns to the queue monitor display.

PC Programming Manual References

4.9 [2-6-1] Numbering Plan—Main—Features—◆ Incoming Call Queue Monitor
5.12 [3-5-1] Incoming Call Distribution Group—Group Settings—Miscellaneous—◆ Supervisor Extension Number

Operating Manual References

1.3.42 ICD Group Features—Supervisory

9.1.8 ICD Group Features—VIP Call

Description

It is possible to assign a priority to incoming call distribution groups. If an extension belongs to multiple groups and the extension becomes idle, queuing calls in the groups will be distributed to the extension in priority order. Each incoming call distribution group can enable or disable the VIP Call mode. When multiple groups enable the VIP Call mode, the incoming call distribution group with the lowest numbered group has the highest priority. When multiple groups disable the VIP Call mode, queuing calls are distributed, one from each ICD group in turn, irrespective of the order in which calls were received.

[Example]

In the call center, incoming call distribution groups 1 and 3 enable the VIP Call mode, while incoming call distribution groups 2 and 4 disable the VIP Call mode.

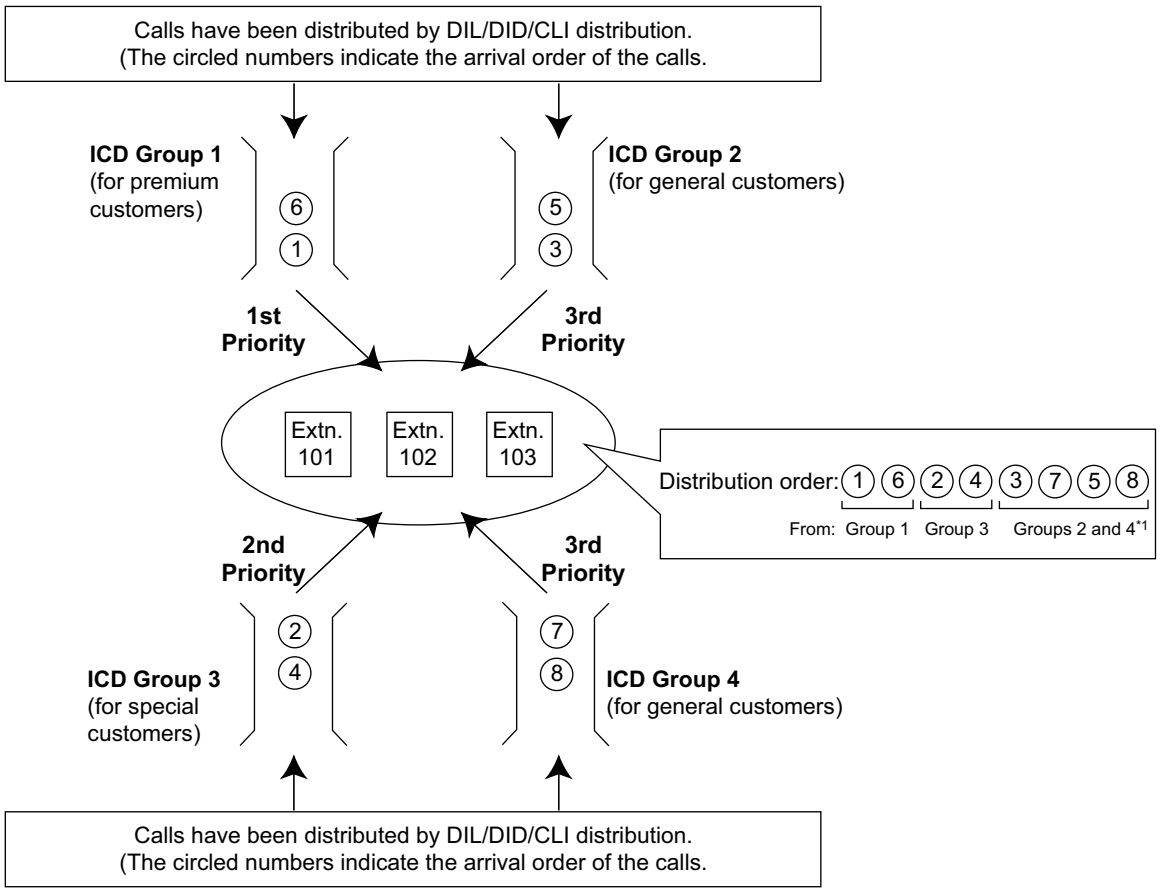

*1 After call 3 is distributed from group 2, call 7 will be distributed from group 4 next, even though call 5 arrived earlier.

PC Programming Manual References

5.12 [3-5-1] Incoming Call Distribution Group—Group Settings—Miscellaneous—◆ VIP Call Mode

9.1.9 Idle Extension Hunting

Description

If a called extension is busy or in DND mode, Idle Extension Hunting redirects the incoming call to an idle member of the same idle extension hunting group, which can be programmed through system programming. Idle extensions are automatically searched according to a preprogrammed hunting type.
This feature is also known as Station Hunting.

Type	Description
Circular Hunting	An idle extension is searched for in the order specified in the idle extension hunting group in a circular way. 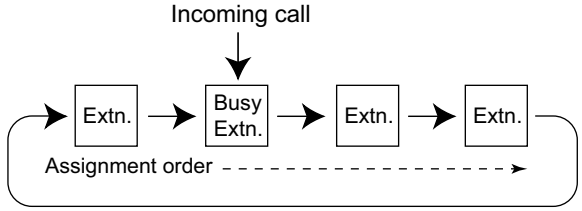
Terminated Hunting	An idle extension is searched for in the order specified in the idle extension hunting group until reaching the last assigned extension. 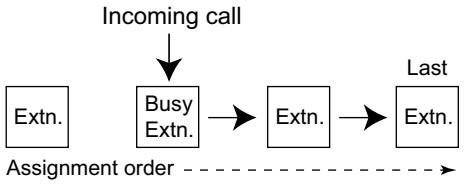

Conditions

- **Idle Extension Hunting applies to:**
  Intercom, CO line, and doorphone calls to a single destination.
- An extension user can belong to only one idle extension hunting group.
- **If all the searched extensions are busy:**
  The PBX redirects the call to an overflow destination which can be assigned for each idle extension hunting group and each time mode (day/lunch/break/night) (→ 17.1.5 Time Service).

[Available Destination]

Destination	Availability
Wired Extension (PT/SLT/SIP Extension/T1-OPX)	✓
PS	✓
ICD Group	✓
PS Ring Group	✓
Floating Extension no. for SVM	
VM Group (DTMF/DPT)	✓
External Pager (TAFAS)	✓
DISA	✓
Analog/ISDN Remote Maintenance	✓
Idle Line Access no. + Phone no.	✓
Trunk Group Access no. + Trunk Group no. + Phone no.	✓
Extension of Another PBX (via TIE Line, Access with PBX Code)	✓

Destination	Availability
Extension of Another PBX (via TIE Line, Access without PBX Code)	✓

- **FWD/DND Mode**
  While searching for an idle extension within an idle extension hunting group, any extension that has set FWD—All Calls or DND feature will be skipped, and the call will go to the next extension in the group.

PC Programming Manual References

5.16 [3-6] Extension Hunting Group
5.17 [3-6] Extension Hunting Group—Member List

PT Programming Manual References

[680] Idle Extension Hunting Type
[681] Idle Extension Hunting Group Member

Feature Manual References

4.1.10 DND (Do Not Disturb)
6.1.6 FWD (Call Forwarding)
21.1 Capacity of System Resources

9.1.10 INCOMING CALL FEATURES

Description

Each CO line functions as either a public line or a private line. Private lines are used to connect different PBXs and form a private network (→ 13.1.15 PRIVATE NETWORK FEATURES), while public lines connect a PBX to a public network, i.e., the telephone company. Certain PBX features are available depending on the networking type (public or private) of each CO line.

1. **Networking Type Used by Each CO Line**
   Each CO line port (channel) of a CO line card or an MPR card is assigned a port (channel) type which determines the CO line's networking type—public or private.
   → 3.36 [1-1] Slot—Port Property - T1 Port—◆ Trunk Property
   → 12.2 [10-2] DIL Table & Port Settings—DIL—◆ Trunk Property

Card Type	Port/Channel/ Protocol Type	Networking Type	
		Public	Private
MPR (V-IPGW)	H.323		✔
MPR (V-SIPGW)	SIP	✔	
IP-GW *1	H.323		✔
ELCOT/LCOT	—	✔	
T1	LCOT	✔	
	GCOT	✔	
	DID	✔	
	TIE (E&M)	✓	✔
	OPX (EXTN.)		
PRI	CO	✔	
	Extension		
	QSIG-Master		✔
	QSIG-Slave		✔

✔: Default
✓: Available

*1 For KX-TDE series PBXs only.

2. Distribution Method

Each public CO line port (channel) can use a different method of directing calls to their destinations as they are received.

Distribution Method	Description	Details in
Direct In Line (DIL)	Directs a call to a preprogrammed destination, such as an operator, based on the CO line carrying the call.	→ 4.1.7 DIL (Direct In Line)
Direct Inward Dialing (DID)	Directs a call received on a DID line to a preprogrammed destination based on the telephone number dialed by the caller.	→ 4.1.6 DID (Direct Inward Dialing)

Calling Line Identification (CLI) distribution is the most customizable call distribution method available. It allows calls from specific people to be directed to specific destinations, based on the callers' telephone numbers. CLI distribution, when enabled for the current time mode, takes precedence over DIL or DID distribution.

Distribution Method	Description	Details in
Calling Line Identification (CLI) Distribution	Directs a call to its preprogrammed destination if the caller's telephone number and its CLI destination has been stored in the System Speed Dialing Table.	→ 3.1.15 CLI (Calling Line Identification) Distribution

3. Available Distribution Method for Public CO Lines

Card Type	Port/Channel Type	Distribution Method	
		DIL	DID
ELCOT/LCOT	—	✔	
T1	LCOT	✔	
	GCOT	✔	
	DID	✓	✔
	TIE (E&M)	✔	✓
PRI	CO	✓	✔

✔: Default
✓: Available

4. Available Destination

The following destination types can be programmed as DIL, DID, or CLI destinations.

Destination Type	Availability
Wired Extension (PT/SLT/SIP Extension/T1-OPX)	✓
PS	✓
ICD Group	✓
PS Ring Group	✓
Floating Extension no. for SVM	✓
VM Group (DTMF/DPT)	✓
External Pager (TAFAS)	✓
DISA	✓
Analog/ISDN Remote Maintenance	✓
Idle Line Access no. + Phone no.	
Trunk Group Access no. + Trunk Group no. + Phone no.	
Extension of Another PBX (via TIE Line, Access with PBX Code)	
Extension of Another PBX (via TIE Line, Access without PBX Code)	✓

5. Intercept Routing

After a call has been directed to its DIL, DID, or CLI destination, the following Intercept Routing features, if programmed, can redirect the call.

Type	Description	Details in
No Answer (IRNA)	If a called party does not answer a call within a preprogrammed time period (Intercept time), the call is redirected to a preprogrammed destination.	→ 9.1.11 Intercept Routing
Busy	If a called party is already handling another call, the new call is redirected to a preprogrammed destination.	
DND	If a called party is in Do Not Disturb (DND) mode, the call is redirected to a preprogrammed destination.	
No Destination	If a destination is not assigned, the call is redirected to an operator.	→ 9.1.12 Intercept Routing—No Destination

PC Programming Manual References

3.36 [1-1] Slot—Port Property - T1 Port—◆ Trunk Property
12.2 [10-2] DIL Table & Port Settings—DIL—◆ Trunk Property

9.1.11 Intercept Routing

Description

Redirects an incoming CO line call or intercom call to a preprogrammed destination when the original destination does not, or can not, answer the call. There are four types of Intercept Routing, described below.

Type	Description
No Answer (IRNA)	If a called party does not answer a call within a preprogrammed time period (IRNA Timer), the call is redirected to a preprogrammed intercept destination. The assigned intercept destination of the extension port. → 4.5 [2-3] Timers & Counters → Dial / IRNA / Recall / Tone—◆ Intercept Routing No Answer (IRNA)—Day, Lunch, Break, Night → DISA / Door / Reminder / U. Conf—◆ DISA—Intercept Timer—Day, Lunch, Break, Night → [203] Intercept Time
Busy	If a called party is already handling a call, new calls are handled as follows: – The call is redirected to the preprogrammed Intercept Routing—Busy destination. – If an Intercept Routing—Busy destination is not enabled, the caller will hear a busy tone. However, if the call is made through an ELCOT/ LCOT or T1 [LCOT/GCOT] card, the caller hears a ringback tone.
DND	If a called party is in Do Not Disturb (DND) mode, the call is redirected to a preprogrammed intercept destination.

Type	Description
No Destination	If a call has no destination (i.e., if a destination is not assigned), the call is redirected to an operator. (→ 9.1.12 Intercept Routing—No Destination)

Intercept Routing redirects calls to destinations based on the original destination of the call, as shown in the table below. Different intercept destinations can be programmed for each time mode. Note that calls redirected by Intercept Routing—No Answer/DND are directed to the same destination, while Intercept Routing—Busy is directed to a separate destination, and the intercept destination for Intercept Routing—No Destination is always an operator.

When the original destination is:	The Available Intercept Destination is:
• Wired Extension (PT/SLT/SIP Extension/ T1-OPX) • PS	The destination assigned to the original extension. 6.1 [4-1-1] Wired Extension—Extension Settings—Intercept Destination → ◆ Intercept Destination—When called party does not answer—Day, Lunch, Break, Night → ◆ Intercept Destination—When Called Party is Busy 6.10 [4-2-1] Portable Station—Extension Settings—Intercept Destination → ◆ Intercept Destination—When called party does not answer—Day, Lunch, Break, Night → ◆ Intercept Destination—When Called Party is Busy → [604] Extension Intercept Destination
• ICD Group	The ICD Group Overflow destination assigned to the group. (→ 9.1.5 ICD Group Features—Overflow) → 5.12 [3-5-1] Incoming Call Distribution Group—Group Settings—Overflow No Answer—◆ Time out & Manual Queue Redirection—Destination-Day, Lunch, Break, Night → [625] Destination for Overflow Time Expiration
• VM Group (DTMF/DPT)	The destination assigned to the first extension of the VM group.
• DISA[*1]	If all DISA ports are busy when a call is made using DISA, one of the following can be selected through system programming: • **Disable:** Busy tone is sent to the caller. When using an analog CO line, a ringback tone is sent. • **Operator:** The call will be redirected to the operator. • **AA-0, AA-9:** The call will be redirected to the destination assigned to that AA number. → 7.3 [5-3-1] Voice Message—DISA System—Option 1—◆ DISA Intercept—Intercept when all DISA ports are busy

When the original destination is:	The Available Intercept Destination is:
• PS Ring Group*2 • External Pager (TAFAS)*2 • Analog/ISDN Remote Maintenance • Other PBX Extension (TIE with no PBX Code)	Not assignable (Intercept Routing is not available.)

*1 Intercept Routing for DISA will redirect a call only if all of the Direct Inward System Access (DISA) ports are busy. If Intercept Routing is activated after a call from DISA reaches the destination extension, the Intercept Routing settings assigned to that extension will be applied.

*2 By assigning the forward destination of a Virtual PS to a PS Ring Group or external pager, and assigning Intercept Routing destinations to the Virtual PS, calls to these destinations will be redirected to the Intercept Routing destination of the Virtual PS.

Programming Example

<Forward Destination of Virtual PS>

"600" is an example of a Floating Extension No. for the External Pager

Ext. No. of the Virtual PS	FWD Destination
2001	600
...	...

<Intercept Destination of Virtual PS>

Ext. No. of the Virtual PS	Intercept Destination				...
	Day	Lunch	Break	Night	
2001	1001	1001	1001	1001	...
...	...	...	...	...	...

When extension 2001 is called from another extension or is the first destination of an incoming CO line call, etc., the call will ring at extension 600 (external pager) first, and then ring at the intercept destination (extension 1001) after the IRNA Timer expires.

[Available Intercept Destination]

The following can be used as intercept destinations:

Intercept Destination	Availability
Wired Extension (PT/SLT/SIP Extension/T1-OPX)	✓
PS	✓
ICD Group	✓
PS Ring Group	✓
Floating Extension no. for SVM	✓
VM Group (DTMF/DPT)	✓
External Pager (TAFAS)	✓
DISA	✓
Analog/ISDN Remote Maintenance	✓

Intercept Destination	Availability
Idle Line Access no. + Phone no.	✓
Trunk Group Access no. + Trunk Group no. + Phone no.	✓
Extension of Another PBX (via TIE Line, Access with PBX Code)	✓
Extension of Another PBX (via TIE Line, Access without PBX Code)	✓

Intercept for calls to an outside destination

When an intercom, CO line, or DISA call is received by an extension and forwarded to an outside destination by FWD—All Calls or FWD—Busy, the Intercept Routing feature can be used, if the outside destination is busy or does not answer. For example, when a call is forwarded to a cellular phone by FWD—All Calls, and the cellular phone is busy, the call will be routed to Voice Mail in the PBX.
This feature is also available when a call is forwarded by FWD—No Answer under the following conditions:

– The forwarding destination is in a private network and is busy or does not answer.
– The forwarding destination is in a public network and does not answer.

However, this feature is not available when a call is forwarded by FWD—No Answer to a destination in a public network that is busy.

Conditions

- **If the intercept destination is busy or in DND mode and therefore cannot receive the call:**
  a. When the call was intercepted via Intercept Routing—No Answer, the call is sent back to the original destination and continues to ring at the original destination until answered.
  b. When the call was intercepted via Intercept Routing—Busy and arrived through an ELCOT/LCOT or T1 (LCOT/GCOT) card, the call waits at the original destination. If the extension has Call Waiting activated, the user will hear a call waiting tone. When the call arrived on any other card, the caller hears a busy tone.
  c. When the call was intercepted via Intercept Routing—DND and arrived through an ELCOT/LCOT or T1 (LCOT/GCOT) card, the call waits at the original destination and it rings. When the call arrived through any other card, the caller hears a busy tone.
- **If the intercept destination can, but does not, answer the call:**
  The call continues to ring at the intercept destination until answered.
- **Intercept Routing—DND on/off**
  Intercept Routing—DND can each be enabled or disabled for the entire system, through system programming. If enabled, calls will be routed to the appropriate destination.
  If disabled, a call to an extension which is in DND mode will be handled as described below, depending on the type of line carrying the call.
  → 12.6 [10-4] Miscellaneous—◆ Intercept—Intercept Routing - DND (Destination sets DND.)
  a. ELCOT/LCOT or T1 (LCOT/GCOT) Card: The caller will hear a ringback tone. If in DND mode, the extension will ring.
  b. All other lines: An outside caller will hear a busy tone and an extension caller will hear a DND tone.
- **Idle Extension Hunting**
  If an extension is a member of an idle extension hunting group, calls to that extension will not be redirected by Intercept Routing—Busy/DND. If the extension is busy or in DND mode, calls to that extension will be redirected to the next extension in the idle extension hunting group.
- Intercept Routing for intercom calls can be enabled or disabled on a system basis.
  → 12.6 [10-4] Miscellaneous—◆ Intercept—Intercept Routing for Extension Call
- **IRNA Timer**
  The IRNA timer can be set on a system basis and an extension basis for each time mode (day, lunch, break, night).

→ 6.1 [4-1-1] Wired Extension—Extension Settings—Intercept No Answer Time—◆ Intercept No Answer Time—Day, Lunch, Break, Night

- The Intercept Routing destination for each time mode will not apply for Intercept Routing—Busy. When the original destination is busy, the call is redirected to the Intercept Routing—Busy destination assigned through system programming. If no destination is assigned the caller will hear a busy tone.
- The time modes that are selected for CO line calls arriving at extensions and VM groups are decided on a tenant basis.
- **Intercept for calls to an outside destination**
  - Channels of a T1 CO line set to LCOT type do not support this feature.
  - This feature may not be available depending on the specifications of the telephone network.
  - This feature is not available when the original call was made from a SIP extension.

PC Programming Manual References

4.5 [2-3] Timers & Counters
→Dial / IRNA / Recall / Tone—◆ Intercept Routing No Answer (IRNA)—Day, Lunch, Break, Night
→DISA / Door / Reminder / U. Conf—◆ DISA—Intercept Timer—Day, Lunch, Break, Night
5.12 [3-5-1] Incoming Call Distribution Group—Group Settings
→Overflow No Answer—◆ Time out & Manual Queue Redirection—Destination-Day, Lunch, Break, Night
6.1 [4-1-1] Wired Extension—Extension Settings
→Intercept Destination
→Intercept No Answer Time
6.10 [4-2-1] Portable Station—Extension Settings
→Intercept Destination
→Intercept No Answer Time
7.3 [5-3-1] Voice Message—DISA System—Option 1—◆ DISA Intercept—Intercept when all DISA ports are busy
12.6 [10-4] Miscellaneous
→◆ Intercept—Intercept Routing - DND (Destination sets DND.)
→◆ Intercept—Routing to Operator - No Destination (Destination is not programmed.)
→◆ Intercept—Intercept Routing for Extension Call

PT Programming Manual References

[203] Intercept Time
[604] Extension Intercept Destination
[625] Destination for Overflow Time Expiration

Feature Manual References

4.1.8 DISA (Direct Inward System Access)
4.1.10 DND (Do Not Disturb)

9.1.12 Intercept Routing—No Destination

Description

Directs a CO line call to an operator when the call has no assigned destination.

Conditions

- **Intercept Routing—No Destination on/off**
  Intercept Routing—No Destination can be enabled or disabled for the entire system, through system programming. If disabled, the caller will hear a reorder tone.
  Note that calls received through an ELCOT/LCOT or T1 (LCOT/GCOT) card will always be directed to an operator, even when this feature is disabled.
- **If an operator is not assigned:**
  The default intercept destination will be the extension connected to the lowest numbered port that is in service, on the card installed in the lowest numbered slot.
- Intercept Routing—No Destination also applies to calls from doorphones.

PC Programming Manual References

4.4 [2-2] Operator & BGM—◆ PBX Operator—Day, Lunch, Break, Night
12.6 [10-4] Miscellaneous—◆ Intercept—Routing to Operator - No Destination (Destination is not programmed.)

PT Programming Manual References

[006] Operator Assignment

Feature Manual References

12.1.5 Operator Features

9.1.13 Intercom Call

Description

An extension user can call another extension user.

Conditions

- **Extension Number/Name Assignment**
  Extension numbers and names are assigned to all extensions. The assigned number and name of the other extension are shown on display PTs during intercom calls.
- **DSS Button**
  It is possible to call another extension by simply pressing the corresponding Direct Station Selection (DSS) button. Any flexible button can be customized as a DSS button.
- **Call Directory—Extension Dialing**
  Display proprietary telephone (PT) users can make a call by selecting stored names on the display.
- **Alternate Receiving—Ring/Voice**
  A PT user can select to receive intercom calls by ring tone or by voice, through personal programming (Alternate Receiving—Ring/Voice). If a user selects voice-calling, the calling party talks to the user immediately after a confirmation tone. Denying voice-calling can also be selected.
- **Alternate Calling—Ring/Voice**
  A caller can change the called party's preset call receiving method (ring tone or voice) temporarily. By doing so, ring-calling is switched to voice-calling, or vice versa, at the called party. The called party may deny voice-calling.
- **PDN/SDN**

It is not possible to temporarily change the called party's preset call receiving method when making a call using a Primary Directory Number (PDN) button or Secondary Directory Number (SDN) button (→ 13.1.7 PDN (Primary Directory Number)/SDN (Secondary Directory Number) Extension).

- **Tone after Dialing**
  After dialing an extension number, a user will hear one of the following:

Type	Description
Ringback Tone	Indicates the called party is being called.
Confirmation Tone	Indicates the called party has set voice-calling.
Busy Tone	Indicates the called party is busy.
DND Tone	Indicates the called party has set DND.

PC Programming Manual References

4.11 [2-6-3] Numbering Plan—B/NA DND Call Feature—◆ Alternate Calling - Ring / Voice
6.1 [4-1-1] Wired Extension—Extension Settings
→Main—◆ Extension Number
→Main—◆ Extension Name
→Option 3—◆ Intercom Call by Voice
6.10 [4-2-1] Portable Station—Extension Settings—Main
→◆ Extension Number
→◆ Extension Name
8.6 [6-6] Tenant—◆ Extension Directory

PT Programming Manual References

[003] Extension Number
[004] Extension Name

Feature Manual References

6.1.3 Flexible Buttons

Operating Manual References

1.2.1 Making Calls
1.3.3 Alternate Calling—Ring/Voice
1.4.3 Directories
3.1.2 Personal Programming

9.1.14 Internal Call Block

Description

Internal calls can be restricted based on the Class of Service (COS) assigned to the caller and to the called party.

[Programming Example: Internal Call Block]

Caller	Called Party			
	COS 1	COS 2	COS 3	COS...
COS 1				
COS 2		Block	Block	Block
COS 3	Block	Block		Block

In this example:

a. COS 1 can make calls to all extensions.
b. COS 2 can make calls to COS 1 only. (COS 2 cannot make calls to COS 2.)
c. COS 3 can make calls to COS 3 only.

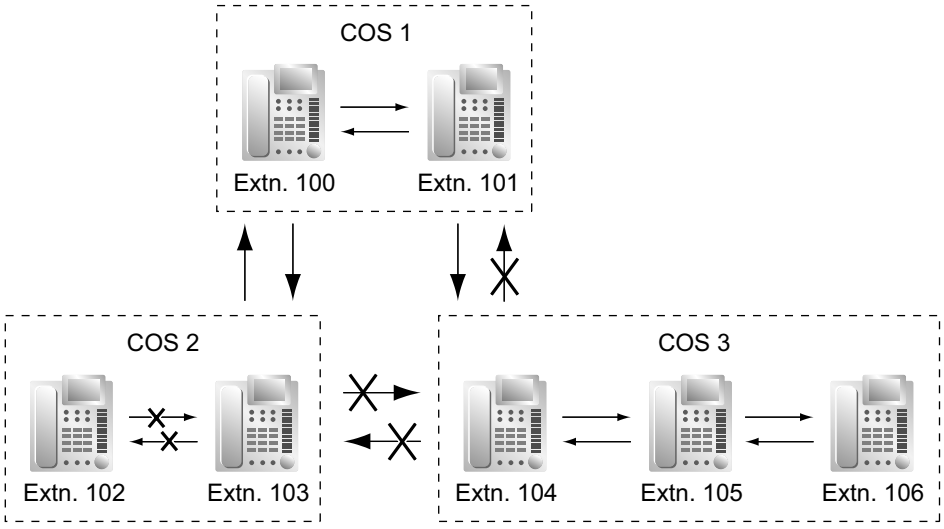

Conditions

- Internal Call Block also prohibits certain features, such as Walking Extension and Walking COS, from being performed between certain extensions.
- Any extension can make an Operator Call regardless of the Internal Call Block setting of its COS. (→ 12.1.5 Operator Features)
- Because each doorphone port is assigned a COS, the Internal Call Block feature can restrict certain extensions from calling certain doorphones. (→ 4.1.12 Doorphone Call)

PC Programming Manual References

4.14 [2-7-3] Class of Service—Internal Call Block—◆ COS Number of the Extension Which Receive the Call from Other Extension 1–64
5.12 [3-5-1] Incoming Call Distribution Group—Group Settings—Main—◆ COS
6.1 [4-1-1] Wired Extension—Extension Settings—Main—◆ COS
6.10 [4-2-1] Portable Station—Extension Settings—Main—◆ COS
7.1 [5-1] Doorphone—◆ COS
7.6 [5-4] External Relay—◆ COS Number

Feature Manual References

3.1.23 COS (Class of Service)

9.1.15 IP-PT (IP Proprietary Telephone)

Description

This PBX supports the connection of IP proprietary telephones (IP-PTs), which function almost identically to normal PTs. However, they connect to the PBX over a Local Area Network (LAN), and send and receive calls using Internet Protocol (IP).
IP-PTs have two Ethernet ports for connection, primary and secondary. They are connected to the PBX through a network hub or other splitting device, and can have a PC connected to the secondary Ethernet port.

[Connection Example]

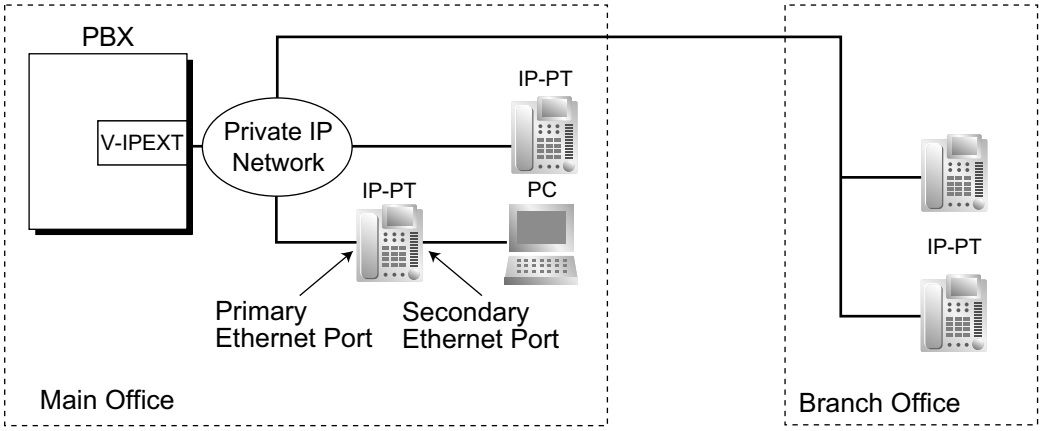

Conditions

- For KX-NCP series: A V-IPEXT card is required to use IP-PTs. The IP-EXT card is not available.
  For KX-TDE series: A V-IPEXT card or IP-EXT card is required to use IP-PTs.
- IP-PT registration is required through system programming before an IP-PT can be used with the PBX. An IP-PT cannot be used unless an extension number is assigned. For details on how to register IP-PTs, see the IP Networking Guide.
- The following features cannot be used with an IP-PT:
  - XDP (→ 13.1.2 Paralleled Telephone)
  - Digital XDP (→ 13.1.2 Paralleled Telephone)
  - OHCA (→ 12.1.3 OHCA (Off-hook Call Announcement))
  - Walking Extension (→ 20.1.2 Walking Extension)
  - Using PC Phone or PC Console on a connected PC (→ 13.1.5 PC Console/PC Phone)
- The KX-NT265 does not have a secondary Ethernet port.
- The following optional devices are available for the KX-NT400/KX-NT300 series (except KX-NT321) IP-PT:
  - KX-NT307(PSLP1528) Bluetooth Module
  - KX-NT303 Add-on 12 Key Module (not available for KX-NT400 or KX-NT366)
  - KX-NT305 Add-on 60 Key Module (not available for KX-NT400 or KX-NT366)
- **KX-NT307(PSLP1528) Bluetooth Module**
  A Bluetooth wireless headset can be registered to a KX-NT400/KX-NT300 series (except KX-NT321) IP-PT containing the KX-NT307(PSLP1528) Bluetooth Module through personal programming. When Headset

Mode is off, the Bluetooth headset can be used to answer calls or redial. In this case, Headset Mode will turn on automatically, and will turn off after you hang up.
This Bluetooth Module is also compatible with KX-DT343/KX-DT346 DPTs.

- Calls made using a Bluetooth wireless headset will not be disconnected immediately when the user wanders out of range. However, if the Bluetooth wireless headset user remains out of range for a specified time period, the call will be disconnected.
- **Automatic Rerouting to Secondary PBX**
  A KX-NT400 IP-PTs, KX-NT300 series IP-PTs, and KX-NT500 series IP-PTs can automatically connect to a secondary PBX, when the primary PBX becomes disconnected. When the primary PBX is connected again, the IP-PT reconnects to it.
- IP-PTs can be connected to the V-IPEXT/IP-EXT card as follows:

	V-IPEXT Card	IP-EXT Card
KX-NT136		✓
KX-NT265		✓
KX-NT265 (version 2.00 or later)	✓	✓
KX-NT300 series (except KX-NT366/KX-NT305)	✓	✓
KX-NT500 series/KX-NT400/KX-NT366/ KX-NT305	✓	

Installation Manual References

KX-NCP500/KX-NCP1000

3.4.1 Virtual Cards

KX-TDE100/KX-TDE200

3.4.1 Virtual Cards
3.6.9 IP-EXT16 Card (KX-TDA0470)

KX-TDE600

3.4.1 Virtual Cards
3.8.8 IP-EXT16 Card (KX-TDA0470)

PC Programming Manual References

3.14 [1-1] Slot—Card Property - Virtual IP Extension
3.15 [1-1] Slot—Port Property - Virtual IP Extension
3.41 [1-1] Slot—Card Property - IP Extension (KX-TDE series only)
3.43 [1-1] Slot—Port Property - IP-Extension Port (KX-TDE series only)

9.1.16 ISDN (INTEGRATED SERVICES DIGITAL NETWORK) FEATURES

Description

Integrated Services Digital Network (ISDN) is a digital switching and transmission network. ISDN transmits voice, data, and image in digital format. ISDN lines can be connected to public lines (CO lines), private lines (QSIG).

1. **ISDN Interface and Configuration**

Interface Type	Description	Port Mode
Primary Rate Interface (PRI)	Provides twenty-three 64 kbps B channels for communication and one 64 kbps D channel for signaling (23B + D).	CO Line, QSIG—Master, QSIG—Slave[*1]

[*1] 3.33 [1-1] Slot—Port Property - PRI Port—Main—◆ Port Type

2. **ISDN Supplementary Services for Public Network**

Service	Description	Details in
Direct Inward Dialing (DID)	Directs a call with a DID number to the preprogrammed destination.	→ 4.1.6 DID (Direct Inward Dialing)
Calling Line Identification Presentation (CLIP)	Sends the caller's telephone number to the network when making a call. The called party can see the number on his or her telephone display before answering the call.	→ 3.1.16 CLIP (Calling Line Identification Presentation)
Connected Line Identification Presentation (COLP)	Sends the telephone number of the answered party to the network when answering a call. The caller can see the number on his telephone display when the line is connected.	
Calling Line Identification Restriction (CLIR)	Prevents the caller's CLI from being presented to the called party.	
Connected Line Identification Restriction (COLR)	Prevents COLP from being sent by the answered party.	
Caller ID	The PBX receives Caller ID information, such as the caller's name and telephone number, when a call is sent from the network. A display proprietary telephone (PT) user can see this information before answering the call.	→ 3.1.3 Caller ID

3. **Private Networking Connection (QSIG)**
Private networking with QSIG is possible using an ISDN line. Each ISDN port must be programmed so that each ISDN line has a "master" connection and a "slave" connection.

Conditions

- **En bloc**
The PBX sends all of dialed digits at once after the extension user completes dialing. The PBX recognizes the end of dialing as follows:
  – the # key is pressed (programmable).
    4.18 [2-9] System Options—Option 2—◆ End of Dial Plan—[#] as End of Dial for en Bloc mode
  – the dialed number is a preprogrammed telephone number.
    5.4 [3-1-4] Dialing Plan
  – the inter-digit timer expires.
    4.5 [2-3] Timers & Counters—Dial / IRNA / Recall / Tone—◆ Dial—Extension Inter-digit
- **Extension Number**
An extension number can be assigned to each ISDN port.
6.1 [4-1-1] Wired Extension—Extension Settings—Main—◆ Extension Number

- **Network Type**
  Each ISDN port can be set to the requirements of each country/area.
- **L1 Active Mode and L2 Data Link Mode**
  The active mode of Layer 1 (L1) and the data link mode of Layer 2 (L2) can be selected individually (Permanent or Call by Call) for each ISDN port.
- **TEI Assignment Mode**
  The Terminal Endpoint Identifier (TEI) assignment mode can be selected for each ISDN port.
- **Bearer Mode**
  The bearer mode can be assigned for each ISDN port.
  6.1 [4-1-1] Wired Extension—Extension Settings—Option 7—◆ ISDN Bearer
  6.10 [4-2-1] Portable Station—Extension Settings—Option 7—◆ ISDN Bearer

PC Programming Manual References

3.32 [1-1] Slot—Card Property - PRI type
3.33 [1-1] Slot—Port Property - PRI Port
3.34 [1-1] Slot—Port Property - PRI Port—Connection Command
4.5 [2-3] Timers & Counters—Dial / IRNA / Recall / Tone—◆ Dial—Extension Inter-digit
4.18 [2-9] System Options—Option 2—◆ End of Dial Plan—[#] as End of Dial for en Bloc mode
5.5 [3-1-4] Dialing Plan—Auto Assign
6.1 [4-1-1] Wired Extension—Extension Settings
→Main—◆ Extension Number
→Option 7—◆ ISDN Bearer
6.10 [4-2-1] Portable Station—Extension Settings—Option 7—◆ ISDN Bearer

Feature Manual References

13.1.20 PRIVATE NETWORK FEATURES—QSIG

Section 10

Features and Configurations—L

10.1 L

10.1.1 LED Indication

Description

The LED of the Message/Ringer Lamp and the following buttons (Line Status Buttons and Corresponding Extension Status Button) can indicate line status with a variety of light patterns.
Line Status Buttons: S-CO, G-CO, L-CO, INTERCOM, ICD Group, PDN
Corresponding Extension Status Button: DSS, SDN

1. **Light Pattern of the Message/Ringer Lamp**

   [Digital proprietary telephone (DPT)]

   - Incoming call from a CO line: Red flashing
   - Incoming call from another extension: Green flashing
   - Message(s) present (no incoming call): Red on
   - No message(s) present (no incoming call): Off

   [Analog proprietary telephone (APT)]

   - Incoming call: Red flashing
   - Message(s) present (no incoming call): Red on
   - No message(s) present (no incoming call): Off

2. Light Pattern of the Line Status Buttons

Line Status Button: / Light Pattern	CO Line Status			Intercom Line Status	Incoming Call Distribution (ICD) Group Line Status
	S-CO	G-CO	L-CO	INTERCOM	ICD Group
Off	Idle				
Green on	This extension is using the line.				
Slow green flashing	This extension is holding the line.				
Moderate green flashing	This extension is holding the line using Exclusive Hold or using the line for an Unattended Conference.				
Rapid green flashing	Incoming call/Privacy Release	Incoming call			
Red on	Incoming call for another extension/ Another extension is using the line/Another extension has the line on Exclusive Hold.	Other extensions are using all CO lines in the trunk group.	–	–	This extension is logged out of the ICD group.
Slow red flashing	Another extension is holding the line.	–	–	–	–
Rapid red flashing	Incoming call to the ICD group in Ring distribution method			–	–

For information on the light patterns of PDN and SDN buttons, refer to 13.1.7 PDN (Primary Directory Number)/SDN (Secondary Directory Number) Extension.

3. Light Pattern of the Corresponding Extension Status Button

Corresponding Extension Status Button / Light Pattern	DSS
Off	Idle
Red on	Busy/Incoming call*1/DND for CO line calls
Rapid red flashing	Incoming call*2

*1 Only when Call Pickup by a DSS button is disabled.
*2 Only when Call Pickup by a DSS button is enabled.

4. **Flashing Light Patterns**

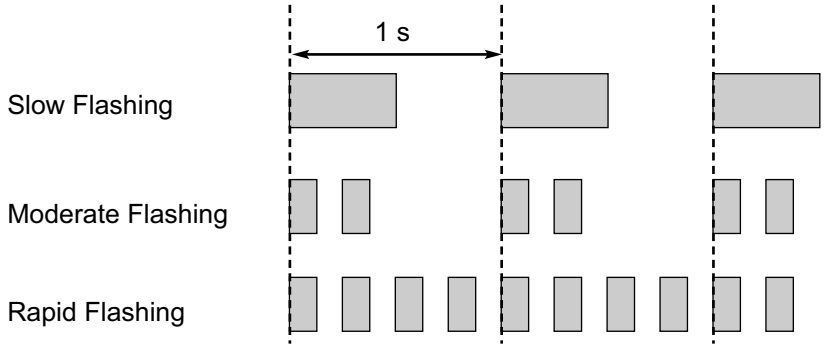

Conditions

- The incoming CO line call shows on the buttons in the following priority:
  ICD Group→S-CO→G-CO→L-CO→PDN→INTERCOM
- The light pattern of a DSS button for incoming calls can be set to "Off" through system programming. In this case, the DSS button light will not indicate the status of the corresponding extension.

PC Programming Manual References

4.18 [2-9] System Options
→Option 1—◆ PT Fwd / DND—Fwd LED
→Option 1—◆ PT Fwd / DND—DND LED
→Option 4—◆ DSS Key—DSS key mode for Incoming Call

Feature Manual References

3.1.5 Call Hold
3.1.19 Conference
6.1.7 FWD/DND Button, Group FWD Button
9.1.2 ICD Group Features—Group Call Distribution
9.1.3 ICD Group Features—Log-in/Log-out
13.1.14 Privacy Release

10.1.2 Line Preference—Incoming

Description

A proprietary telephone (PT) user can select the method used to answer incoming calls from the following three line preferences.
Each of these line preferences can be assigned on each extension through personal programming (Preferred Line Assignment—Incoming).

Type	Description
No Line	Selects a line by pressing the desired Line Access button to answer an incoming call after you go off-hook.

Type	Description
PDN	Answers a call arriving at a Primary Directory Number (PDN) button simply by going off-hook. This works even when multiple calls are received simultaneously. (→ 13.1.7 PDN (Primary Directory Number)/SDN (Secondary Directory Number) Extension)
Prime Line	Answers a call arriving at a CO button (on which the "Prime Line" is assigned) simply by going off-hook. This works even when multiple calls are received simultaneously.
Ringing Line (default)	Answers the longest ringing call when multiple calls arrive at one's own telephone simply by going off-hook.

Conditions

[Prime Line]

- The priority of the incoming call is as follows:
  1. The call arriving at a button on which the "Prime Line" is assigned.
  2. The call arriving at the INTERCOM button.

PC Programming Manual References

6.1 [4-1-1] Wired Extension—Extension Settings—Option 4—◆ Incoming Preferred Line
6.10 [4-2-1] Portable Station—Extension Settings—Option 4—◆ Incoming Preferred Line

Operating Manual References

3.1.2 Personal Programming

10.1.3 Line Preference—Outgoing

Description

Through personal programming, a proprietary telephone (PT) user can select the preferred method of seizing a line (Preferred Line Assignment—Outgoing) that is used each time the user goes off-hook.

Method	Description
ICM/PDN	When an extension user goes off-hook, an extension line is selected automatically. If the extension is a PDN extension, the first available Primary Directory number (PDN) button is selected automatically. (→ 13.1.7 PDN (Primary Directory Number)/SDN (Secondary Directory Number) Extension)
Idle Line	When an extension user goes off-hook, an idle CO line is selected automatically from the assigned trunk groups.
No Line	When an extension user goes off-hook, no line is selected. In order to make a call, the user must select the desired line manually.

Method	Description
Prime Line	When an extension user goes off-hook, the preset line is selected automatically. A prime line can be selected from the Line Access buttons: S-CO, G-CO, L-CO, ICD Group.

Conditions

- **Line Preference Override**
  A user can override the preset Line Preference temporarily by pressing the desired Line Access button or a Memory Dialing button, such as One-touch Dialing, before going off-hook.
- To select Idle Line Preference, the trunk groups available to the extension should be programmed on a COS basis. Also trunk groups available for Idle Line Access should be assigned.

PC Programming Manual References

4.13 [2-7-2] Class of Service—External Call Block
5.2 [3-1-2] Trunk Group—Local Access Priority
6.1 [4-1-1] Wired Extension—Extension Settings—Option 4—◆ Outgoing Preferred Line
6.10 [4-2-1] Portable Station—Extension Settings—Option 4—◆ Outgoing Preferred Line

PT Programming Manual References

[103] Idle Line Access (Local Access)
[500] Trunk Group Number

Operating Manual References

3.1.2 Personal Programming

10.1.4 Local Alarm Information

Description

When the PBX detects an error, the System Alarm button on the proprietary telephone (PT) of an extension which is allowed to use this feature through system programming (a maximum of two extensions per PBX), lights red. Pressing the button will show the error number on the display. If multiple errors occur, the error number will be displayed in order of highest priority to lowest. The System Alarm button light turns off automatically after all error numbers have been displayed.
For details about the errors and their solutions, refer to the Installation Manual.

[Error Example]

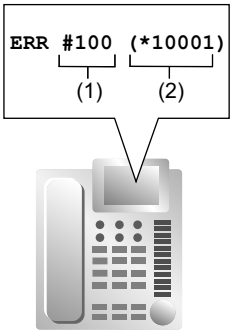

[Explanation]

Number in the Example	Item	Description
(1)	**Error Code**	Shows three-digit error code.
(2)	**Sub Code**	Shows six-digit sub code (WXYYZZ). **W:** Shelf type (Physical shelf: blank, Virtual shelf: *) **X:** Shelf number (1–4) **YY:** Slot number (00–11) **ZZ:** Physical port number (01–16)

Conditions

- **System Alarm Button**
  Any flexible button can be customized as the System Alarm button.
- If an extension allowed to utilize this feature uses PC Console or PC Phone, the alarm information will be displayed on the PC, and can be sent to the preprogrammed destination via PC Console or PC Phone. PC Console and PC Phone use e-mail to send the information.
- The alarm information will be logged on the Station Message Detail Recording (SMDR), if enabled through system programming.
- The PBX can be automatically diagnosed at a preprogrammed time everyday.

Installation Manual References

KX-NCP500/KX-NCP1000

5.1.5 Troubleshooting by Error Log

KX-TDE100/KX-TDE200

5.1.5 Troubleshooting by Error Log

KX-TDE600

5.1.5 Troubleshooting by Error Log

PC Programming Manual References

2.6.7 Utility—Message File Transfer PBX to PC
6.5 [4-1-4] Wired Extension—Flexible Button—◆ Type
6.13 [4-2-3] Portable Station—Flexible Button—◆ Type
6.18 [4-3] DSS Console—◆ Type
13.1 [11-1] Main

→SMDR—◆ Print Information—Error Log
→Maintenance—◆ Local Alarm Display—Extension 1, Extension 2
→Maintenance—◆ Daily Test Start Time—Set
→Maintenance—◆ Daily Test Start Time—Hour
→Maintenance—◆ Daily Test Start Time—Minute

Feature Manual References

6.1.3 Flexible Buttons
16.1.4 SMDR (Station Message Detail Recording)

Section 11

Features and Configurations—M

11.1 M

11.1.1 Manager Features

Description

An extension assigned as a manager (manager extension) is allowed to use certain features which most extensions cannot. Class of Service (COS) programming determines which extensions are manager extensions and can therefore use the following features:

Feature		Description	Manager Password	Details in
Manager Programming	**Manager Password Change**	Changes the manager password.	Required	–
	Verification Code Personal Identification Number (PIN) Set	Sets a Verification Code PIN for each Verification Code.	Required	→ 19.1.1 Verification Code Entry
	Remote PIN Clear	Clears the extension PIN of an extension remotely, or a verification code PIN. PIN Lock is also unlocked.	Required	→ 5.1.6 Extension PIN (Personal Identification Number) → 19.1.1 Verification Code Entry
	Remote Extension Dial Lock	Sets or cancels the Extension Dial Lock on an extension remotely.	Required	→ 5.1.4 Extension Dial Lock
Dial Tone Transfer		Changes the Toll Restriction (TRS) level of an extension temporarily, allowing the extension user to make a normally unauthorized call.	Not required	→ 4.1.5 Dial Tone Transfer
Outgoing Message (OGM)		Records and plays back OGMs.	Not required	→ 12.1.2 OGM (Outgoing Message)
Time Service		Switches the time mode manually.	Not required	→ 17.1.5 Time Service
BGM—External		Turns the External BGM on and off.	Not required	→ 2.1.1 BGM (Background Music)

Feature	Description	Manager Password	Details in
NDSS Monitor Release	Removes the monitor function from an NDSS button.	Not required	→ 13.1.17 Private Network Features—NDSS (Network Direct Station Selection)

Conditions

CAUTION

There is a risk that fraudulent telephone calls will be made if a third party discovers a personal identification number (PIN) (verification code PIN or extension PIN) of the PBX. The cost of such calls will be billed to the owner/renter of the PBX. To protect the PBX from this kind of fraudulent use, we strongly recommend:

a. Keeping PINs secret.
b. Selecting complex, random PINs that cannot be easily guessed.
c. Changing PINs regularly.

- **Manager Password**
  Only one manager password can be assigned per PBX.

PC Programming Manual References

4.12 [2-7-1] Class of Service—COS Settings—Manager—◆ Manager
13.1 [11-1] Main—Password—◆ Manager Password - PT Programming—Prog *1

PT Programming Manual References

[112] Manager Password
[511] Manager Assignment

Feature Manual References

3.1.23 COS (Class of Service)

Operating Manual References

2.1 Manager Service Features
3.2.2 Manager Programming

11.1.2 MEMORY DIALING FEATURES

Description

An extension user can store frequently dialed numbers in the PBX extension data and/or the PBX system data. A stored number is dialed automatically with a simple operation.

1. Features

Feature		Storing Method	Details in
One-touch Dialing		• Personal Programming • System Programming (PC Programming only)	→ 12.1.4 One-touch Dialing
Last Number Redial (Outgoing Call Log)		The last or most recent dialed numbers are automatically stored.	→ 15.1.1 Redial, Last Number
Speed Dialing	**Personal**	• Personal Programming • Personal Operation with the Feature Number • System Programming (PC Programming only)	→ 16.1.7 Speed Dialing, Personal
	System	System Programming	→ 16.1.8 Speed Dialing, System
Quick Dialing		System Programming (PC Programming only)	→ 14.1.1 Quick Dialing
Hot Line		• Personal Programming • Personal Operation with the Feature Number • System Programming (PC Programming only)	→ 8.1.6 Hot Line
Incoming Call Log		Incoming call information is automatically stored.	→ 3.1.6 Call Log, Incoming

2. Valid Input

Input	Displayed while Entering	Description
0–9/✳/#	0–9/✳/#	Store digits, ✳ and # by pressing the corresponding buttons.
PAUSE (Pause)	P	Store a dialing pause by pressing the PAUSE button. (→ 13.1.4 Pause Insertion)
FLASH/RECALL (Hooking)*1	F	Store a flash/recall signal (EFA mode) by pressing the FLASH/RECALL button at the beginning of the number. (→ 5.1.1 EFA (External Feature Access))
INTERCOM (Secret)*1	[ ]	Conceal all or part of the number by pressing the INTERCOM button at the beginning and at the end of the number to be concealed. It is programmable whether the concealed part will be shown on the SMDR. (→ 16.1.4 SMDR (Station Message Detail Recording))

Input	Displayed while Entering	Description
TRANSFER (Transfer)*1	T	Store a transfer command by pressing the TRANSFER button at the beginning of the number (used only for One-touch Dialing). (→ 3.1.11 Call Transfer) **[Example]** Storing "T + 305"= Transferring a call to extension 305.

*1 Available only when in the system/personal programming mode

[Secret Dialing Example]

When storing the number "9-123-456-7890", to conceal the telephone number "123-456-7890",

Enter [9] → [INTERCOM] → [1] [2] [3] [4] [5] [6] [7] [8] [9] [0] → [INTERCOM].

Note

- It is possible to store a Memory Dialing feature number at the beginning of Memory Dialing numbers.
- It is possible to store several feature numbers in one Memory Dialing location.

Conditions

- **CO Line Access by Memory Dialing**
  A specific CO Line Access number can be stored along with the telephone number in Memory Dialing. However, if Memory Dialing is done after selecting a CO line, the stored CO Line Access number is ignored and the telephone number is sent using the selected CO line.

11.1.3 Message Waiting

Description

When an extension user calls another extension that does not or cannot answer the call, he or she can leave a Message Waiting notification. The appropriate button or lamp on the called extension user's telephone will light, indicating that a call was missed or a message recorded by the Voice Processing System (VPS) or the Simplified Voice Message (SVM) feature is waiting. A Message button can be used to call the caller back or listen to the message.
When a message is left for a proprietary telephone (PT), the Message button on it lights or the Message/Ringer Lamp turns red. Pressing the lit Message button while on-hook shows the caller's information as shown below:

[Example]

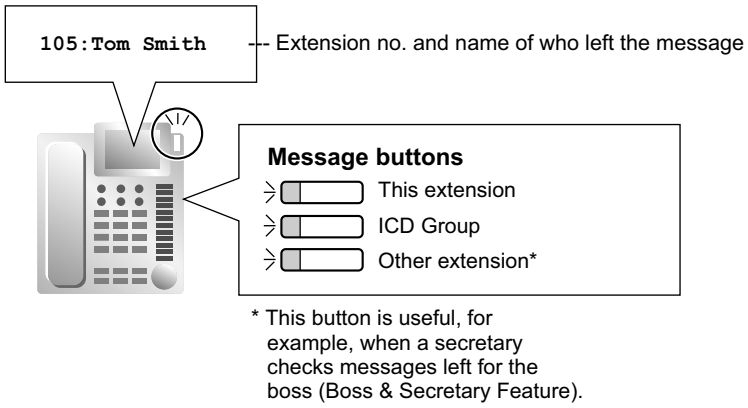

Conditions

- **Message Button**
  Any flexible button can be assigned as a Message button. This button can be used on a PT which does not have the MESSAGE button (fixed button), or can be used on any PT to access messages left for another extension or for an incoming call distribution (ICD) group.
- **Distinctive Dial Tone for Message Waiting**
  If Distinctive Dial mode is enabled, dial tone 4 will be sent to an extension when a message has been left on the extension. (→ 4.1.4 Dial Tone)
- **SLT with a Message Waiting Lamp (KX-TDE series only)**
  The lamp activates in the same way as the MESSAGE button on a PT, if an EMSLC, MSLC, or MCSLC card is connected to the PBX. The preferred Message Waiting Lamp light pattern can be selected from the twelve patterns shown below. System programming for each extension port is required to use this feature.

[SLT Message Waiting Lamp Light Patterns]

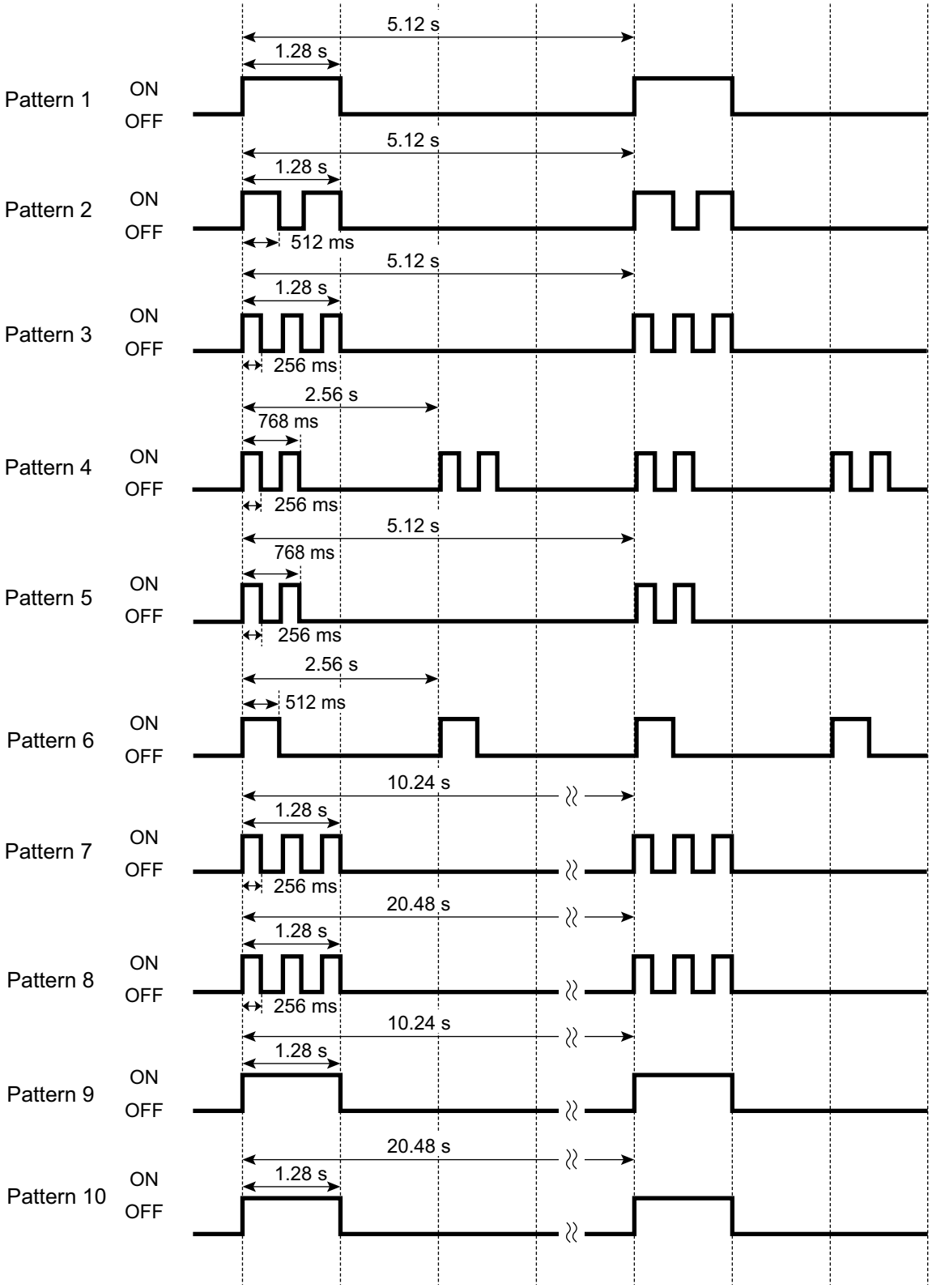

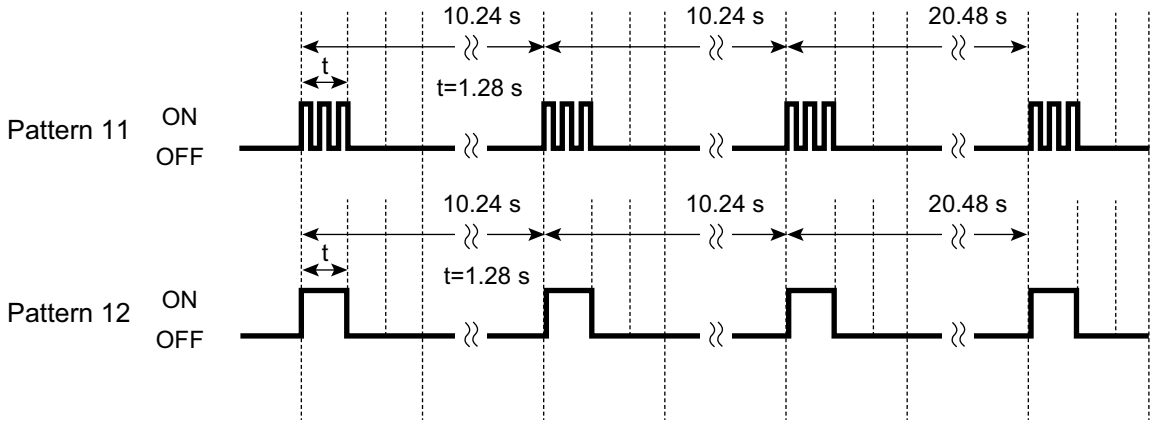

- It is possible to leave a Message Waiting notification while hearing a ringback tone, busy tone, or DND tone.
- Messages are always left on the original destination extension, regardless of that extension's FWD settings. (→ 6.1.6 FWD (Call Forwarding))
- Both the calling extension and the called extension can cancel a notification after it has been left.
- If the extension that received a notification calls back the extension that sent the notification, and the call is answered, the notification will be cleared automatically. However, if a voice message has been left on the VPS, whether the notification is cleared or not depends on the VPS settings.
- If a voice message has been left on the VPS for a SIP extension (except KX-HGT100), the lamp will not turn on.

Installation Manual References

KX-NCP500/KX-NCP1000

None

KX-TDE100/KX-TDE200

3.6.7 SLC16 Card (KX-TDA0174), MSLC16 Card (KX-TDA0175), and CSLC16 Card (KX-TDA0177)
3.6.8 MCSLC16 Card (KX-TDA1176) and MCSLC24 Card (KX-TDA1178)

KX-TDE600

3.8.7 CSLC16 Card (KX-TDA0177), ESLC16 Card (KX-TDA6174), EMSLC16 Card (KX-TDA6175), ECSLC24 Card (KX-TDA6178), and EMSLC24 Card (KX-TDA6179)

PC Programming Manual References

3.23 [1-1] Slot—Card Property - Extension Type—◆ SLT Power Supply (KX-TDE series only)
4.9 [2-6-1] Numbering Plan—Main—Features—◆ Message Waiting Set / Cancel / Call Back
4.11 [2-6-3] Numbering Plan—B/NA DND Call Feature—◆ Message Waiting Set
4.18 [2-9] System Options
→Option 3—◆ Dial Tone—Distinctive Dial Tone
→Option 5—◆ SLT—Message Waiting Lamp Pattern (KX-TDE series only)
5.21 [3-8-1] VM(DTMF) Group—System Settings—◆ VM DTMF Command—Listening Message
6.1 [4-1-1] Wired Extension—Extension Settings—Option 8—◆ SLT MW Mode (KX-TDE series only)
6.5 [4-1-4] Wired Extension—Flexible Button—◆ Type
6.13 [4-2-3] Portable Station—Flexible Button—◆ Type
6.18 [4-3] DSS Console—◆ Type

Feature Manual References

6.1.3 Flexible Buttons
21.1 Capacity of System Resources

Operating Manual References

1.3.43 Message Waiting

11.1.4 Music on Hold

Description

Music or other audio can be played to a party that has been put on hold. The following audio sources are available:

a. Internal music source
b. External music source
c. Outgoing Message (OGM)
d. Tone

Audio sources are assigned to specific BGM numbers according to the table below. One of these BGM numbers, or the tone, can be selected for Music on Hold.

[BGM Number and the Music Source]

BGM No.	Music Source	
	KX-NCP Series PBX	KX-TDE Series PBX
1	External music port 1, internal music source 1, or internal music source 2	External music port 1
2	OGM	External music port 2, internal music source 1, or internal music source 2
3	OGM	OGM
4	OGM	OGM
5	OGM	OGM
6	OGM	OGM
7	OGM	OGM
8	(Not available)	OGM

For tenant users, each tenant can select one of the BGMs or the tone to use for Music on Hold.

Conditions

[General]

- **Hardware Requirement:** User-supplied music source (when an external music source is assigned)
- **Volume Control**
  It is possible to change the volume of an internal and/or external music source.
- For tenants, the type of call determines which tenant's music source is used, as follows:

Type	Music Source
Incoming Intercom Calls/Outgoing Calls	Selected based on the tenant setting to which the extension user belongs.
Incoming CO Line Calls	Selected based on the tenant setting of the distribution method (DIL/DID).

[Using OGMs for BGM]

- This feature will function using the preinstalled MPR card. To increase the number of music sources for this feature, it is possible to add an ESVM4 card mounted on an OPB3 card. The MSG4 card is not recommended for use with Music on Hold.
- To use OGMs for BGM, the corresponding ESVM card/block's SVM Feature must be disabled, and MSG Feature (OGM) enabled.
- When an OGM is assigned to a BGM, the channel for that OGM becomes occupied and cannot be used for other OGM features, even when no calling parties are listening to Music on Hold.

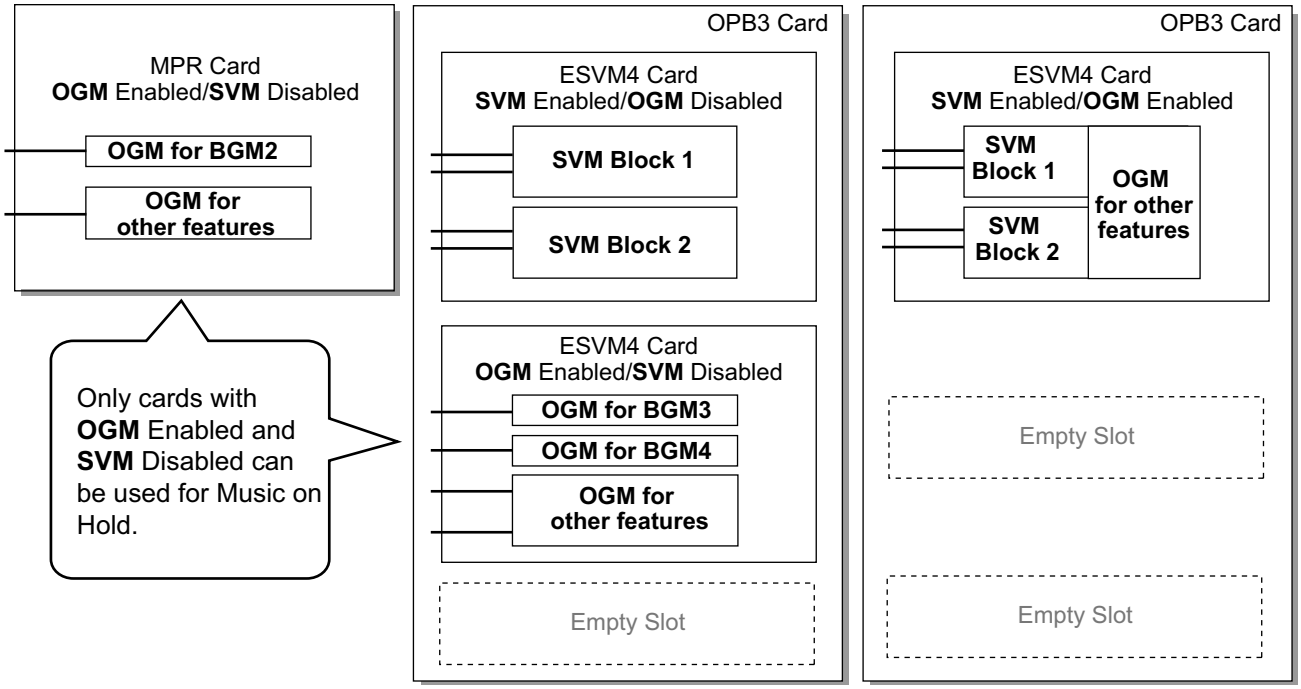

Installation Manual References

KX-NCP500/KX-NCP1000

3.10.1 Connection of Peripherals

KX-TDE100/KX-TDE200

3.10.1 Connection of Peripherals

KX-TDE600

3.12.1 Connection of Peripherals

PC Programming Manual References

3.5 [1-1] Slot—OPB3 Card Property

→◆ SVM Feature
→◆ MSG Feature
3.44 [1-1] Slot—OPB3 Card Property
→◆ SVM Feature
→◆ MSG Feature
4.4 [2-2] Operator & BGM
4.20 [2-11-1] Audio Gain—Paging/MOH
→◆ MOH—MOH (Music On Hold) (for KX-NCP series)/MOH 1 (Music On Hold 1) (for KX-TDE series)
→◆ MOH—MOH 2 (Music On Hold 2) (KX-TDE series only)

PT Programming Manual References

[710] Music Source Selection for BGM (for KX-NCP500/KX-NCP1000)/BGM2 (for KX-TDE100/KX-TDE200/KX-TDE600)
[711] Music on Hold

Feature Manual References

12.1.2 OGM (Outgoing Message)
17.1.3 Tenant Service

11.1.5 Mute

Description

During a conversation, a proprietary telephone (PT) user can disable the built-in microphone or the handset microphone to consult privately with others while listening to the other party on the phone through the built-in speaker or the handset receiver. The user can hear the other party's voice during Mute. Only your voice will be muted.

Conditions

- This feature is available on all PTs that have the AUTO ANS/MUTE button.

Operating Manual References

1.3.44 Mute

Section 12

Features and Configurations—O

12.1 O

12.1.1 Off-hook Monitor

Description

A proprietary telephone (PT) user can let others listen to the user's conversation through the built-in speaker, during a conversation using the handset.

Conditions

- **Compatible Telephones**
  - KX-DT300 series
  - KX-T7600 series
  - KX-T7400 series (display PT only)
  - KX-NT series

  To enable this feature, system programming is required. If disabled, hands-free conversation is performed instead.

PC Programming Manual References

4.18 [2-9] System Options—Option 1—◆ PT Operation—Off Hook Monitor for KX-T74xx/T76xx

Operating Manual References

1.3.45 Off-hook Monitor

12.1.2 OGM (Outgoing Message)

Description

An extension assigned as a manager (manager extension) can record outgoing messages (OGMs) for the following features:

Feature	Usage	Details in
Direct Inward System Access (DISA)	When a call arrives on a DISA line, the caller will hear a message.	→ 4.1.8 DISA (Direct Inward System Access)
Queuing Feature	If assigned in the Queuing Time Table of the incoming call distribution (ICD) group, callers waiting in a queue will hear a message.	→ 9.1.6 ICD Group Features—Queuing
Timed Reminder	When answering the Timed Reminder Alarm, the user will hear a message.	→ 17.1.4 Timed Reminder
Music on Hold	The party put on hold will hear a message or recorded music.	→ 11.1.4 Music on Hold

Feature	Usage	Details in
Background Music (BGM)	Extensions can listen to music through their built-in speaker.	→ 2.1.1 BGM (Background Music)

Conditions

- This feature will function using the preinstalled MPR card. To increase the capacity of the feature, it is possible to add an MSG4 card or ESVM4 card mounted on an OPB3 card.
- **Number of Messages and Recording Time**
  The PBX can record a maximum of 64 messages.
- A floating extension number is assigned to each outgoing message (OGM) (default: 5 + two-digit OGM number).
- The SVM/OGM Block on the MPR card allows two messages to play simultaneously, and one MSG4 or ESVM4 card allows four messages to play simultaneously. Increasing the number of cards does not increase the total recording time or the number of messages; it increases the number of messages that can be played simultaneously.

[Example]

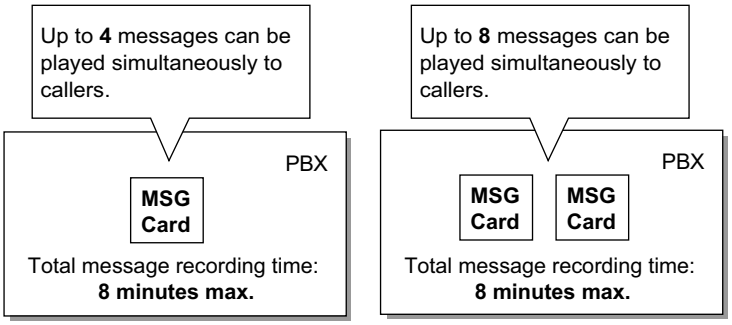

The maximum recording time for each card depends on the recording quality and the type of card used, as follows:

Recording Quality	Recording Time with the MPR/ ESVM4 Card	Recording Time with the MSG4 Card
High (default)	about 20 minutes	about 8 minutes
Middle	about 60 minutes	about 8 minutes
Low	about 120 minutes	about 8 minutes

When cards of different types are installed, the shortest recording time is used. For example, if an ESVM4 card and an MSG4 card are installed, the maximum recording time at default will be about 8 minutes.

Note

When an additional MSG/ESVM card is added, it is blank—all necessary messages will need to be stored in the new card. This can be done in two ways:

a. By installing the new MSG/ESVM card then recording each message again. The PBX will automatically store the new recordings in each card.

b. By transferring messages from the PBX to a PC using Maintenance Console, then transferring them back to the PBX with the new MSG/ESVM card installed.

- The same message can be played to multiple callers simultaneously.
- **Recording Methods**
  a. Record voice messages through the extension telephone.
  b. Transfer prerecorded voice messages from an external audio source to the PBX via an external music port.

Note

Record voice messages only; avoid the recording of music.
However, it is possible to record music when using an MPR/ESVM card in High Recording Quality mode.

- After recording messages, a manager extension can also play them back for confirmation.
- A progress tone is sent to a manager extension before recording messages for a preprogrammed time period, or while clearing a prerecorded message assigned to a floating extension number.
- When a manager tries to record a message, he or she will hear a ringback tone if a message channel is in use. When all ports of the MSG/ESVM card(s) become idle, the manager will hear the progress tone for a preprogrammed time period, then the PBX will automatically switch to the recording mode.

Installation Manual References

KX-NCP500/KX-NCP1000

3.3.1 IPCMPR Card
3.7.1 OPB3 Card (KX-NCP1190)
3.7.5 MSG4 Card (KX-TDA0191)
3.7.6 ESVM4 Card (KX-TDA0194)

KX-TDE100/KX-TDE200

3.3.1 IPCMPR Card
3.7.1 OPB3 Card (KX-TDA0190)
3.7.5 MSG4 Card (KX-TDA0191)
3.7.6 ESVM4 Card (KX-TDA0194)

KX-TDE600

3.3.1 IPCEMPR Card
3.9.1 OPB3 Card (KX-TDA0190)
3.9.4 MSG4 Card (KX-TDA0191)
3.9.5 ESVM4 Card (KX-TDA0194)

PC Programming Manual References

2.6.6 Utility—Message File Transfer PC to PBX
2.6.7 Utility—Message File Transfer PBX to PC
3.5 [1-1] Slot—OPB3 Card Property—◆ MSG Feature
3.44 [1-1] Slot—OPB3 Card Property—◆ MSG Feature
4.5 [2-3] Timers & Counters—DISA / Door / Reminder / U. Conf—◆ DISA—Progress Tone Continuation Time before Recording Message
4.9 [2-6-1] Numbering Plan—Main—Features—◆ OGM Record / Clear / Playback
5.14 [3-5-2] Incoming Call Distribution Group—Queuing Time Table—◆ Queuing Sequence—Sequence 01–16
7.3 [5-3-1] Voice Message—DISA System—Option 2—◆ Recording Mode
7.4 [5-3-2] Voice Message—DISA Message—◆ Floating Extension Number

PT Programming Manual References

[631] Sequences in Queuing Time Table
[730] Outgoing Message (OGM) Floating Extension Number

Feature Manual References

16.1.9 SVM (Simplified Voice Message)
21.1 Capacity of System Resources

Operating Manual References

2.1.3 OGM (Outgoing Messages)

12.1.3 OHCA (Off-hook Call Announcement)

Description

An extension user can talk with a busy extension through the built-in speaker and microphone of the called party's proprietary telephone (PT). If the existing call is using a handset, a second conversation is made using the speakerphone and microphone so that the called extension can talk to both parties.

Conditions

- Class of Service (COS) programming determines which extensions can use this feature.
- This feature is available when the called extension uses one of the following telephones:
  - KX-T7625, KX-T7630, KX-T7633, KX-T7636, KX-DT333, KX-DT343, KX-DT346
  - KX-T7436
  - KX-T7235
- Off-hook Call Announcement (OHCA) cannot be used when:
  a. The OHCA mode of the caller's COS is set to "Disable".
  b. The called extension's telephone is not compatible with this OHCA.
  c. The called extension is a digital proprietary telephone (DPT) which is connected via a USB Module to a computer running PC Console or PC Phone.
  d. The called extension is in a Digital XDP connection.
  In these cases, a call waiting tone is sent to the called extension. (→ 3.1.13 Call Waiting Tone)
- While an extension is receiving an OHCA, if the extension user places the current CO line call on hold or transfers the current intercom call or CO line call, the OHCA will become disabled and the calling extension will hear a ringback tone.
- While an extension is receiving an OHCA, if the extension user places the current intercom call on hold, the called extension can talk to the calling extension through the handset.

PC Programming Manual References

4.11 [2-6-3] Numbering Plan—B/NA DND Call Feature
→◆ BSS / OHCA / Whisper OHCA / DND Override
→◆ BSS / OHCA / Whisper OHCA / DND Override-2
4.12 [2-7-1] Class of Service—COS Settings—Assistant—◆ OHCA / Whisper OHCA

Feature Manual References

3.1.23 COS (Class of Service)

Operating Manual References

1.3.13 Call Waiting Tone

12.1.4 One-touch Dialing

Description

A proprietary telephone (PT) user can make a call or access a feature with a one-touch operation. This is possible by storing the number, such as an extension number, telephone number, or feature number in a One-touch Dialing button.

Conditions

- **One-touch Dialing Button**
  Any flexible button can be customized as a One-touch Dialing button.
- **Full One-touch Dialing**
  There is no need to go off-hook before pressing a One-touch Dialing button.

PC Programming Manual References

6.1 [4-1-1] Wired Extension—Extension Settings—Option 6—◆ Flexible Button Programming Mode
6.5 [4-1-4] Wired Extension—Flexible Button
→◆ Type
→◆ Dial (for One-touch)
6.10 [4-2-1] Portable Station—Extension Settings—Option 6—◆ Flexible Button Programming Mode
6.13 [4-2-3] Portable Station—Flexible Button
→◆ Type
→◆ Dial (for One-touch)
6.18 [4-3] DSS Console
→◆ Type
→◆ Dial (for One-touch)

Feature Manual References

6.1.3 Flexible Buttons
21.1 Capacity of System Resources

Operating Manual References

1.3.47 One-touch Dialing

12.1.5 Operator Features

Description

Any extension or Incoming Call Distribution (ICD) group can be designated as an operator.

This PBX supports the following types of operators:

Type	Description
PBX operator	An extension or ICD group can be assigned as a PBX operator for each time mode (day/lunch/break/night).
Tenant operator	An extension or incoming call distribution group can be assigned as a tenant operator. The tenant operator may be the extension or ICD group of another tenant. **[Example]** Extension 110 in tenant 1 is the tenant operator of tenant 3.

Operator Call:

An extension user can call an operator by dialing the preprogrammed Operator Call feature number. The destination of the Operator Call depends on the following:

– If the Tenant Service is not in use:
  The call is directed to the PBX operator according to the corresponding time mode.
– If the Tenant Service is in use:
  The call is directed to the extension's tenant operator. If a tenant operator is not assigned, the call is directed to the PBX operator. In this case, the current time mode of the extension's tenant is used to determine the PBX operator that the call is directed to.

If neither a tenant operator nor a PBX operator is assigned, the caller will hear a reorder tone.

Conditions

- An extension or ICD group can be assigned as both a tenant operator and the PBX operator.
- The same tenant operator can be assigned as the operator for multiple tenants.

PC Programming Manual References

4.4 [2-2] Operator & BGM—◆ PBX Operator—Day, Lunch, Break, Night
8.6 [6-6] Tenant—◆ Operator (Extension Number)

PT Programming Manual References

[006] Operator Assignment

Feature Manual References

17.1.3 Tenant Service
21.1 Capacity of System Resources

Operating Manual References

1.2.1 Making Calls

Section 13

Features and Configurations—P

13.1 P

13.1.1 Paging

Description

An extension user can make a voice announcement to several people at once.
The announcement is heard through the built-in speakers of proprietary telephones (PTs) and/or external pagers (loudspeakers) which belong to a paging group. KX-TDE series PBXs can connect to two external pagers. However, KX-NCP series PBXs can connect to one external pager.
The paged person can answer the page from a nearby telephone.
It is possible to page with a call on hold in order to transfer the call.
Paging Deny:
It is possible to deny being paged on an extension basis.

Paging Group

Each paging group consists of extension user groups and external pagers. One extension user group or external pager can belong to several paging groups.
(→ 7.1.1 GROUP FEATURES)

[Example]

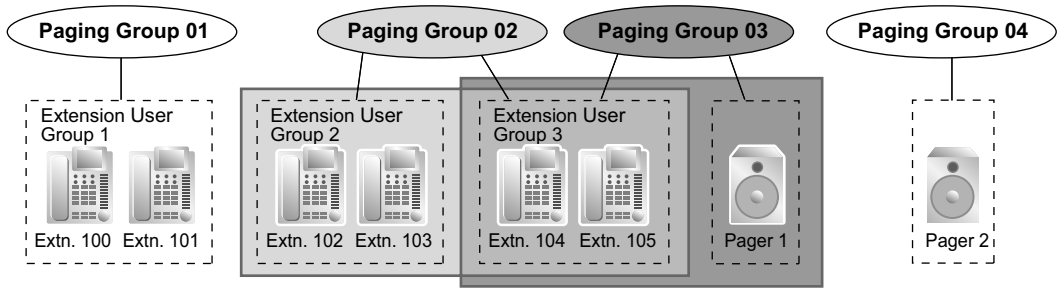

[Programming Example]

Paging Group No.	Extension User Group No. *1				External Pager No. *2	
	001	002	003	…	1	2
01	✔					
02		✔	✔			
03			✔		✔	
04						✔
05	✔	✔	✔		✔	✔

✓: Constituent

*1 → 5.9 [3-4] Paging Group
or
5.10 [3-4] Paging Group—All Setting
→ [640] Extension User Groups of a Paging Group

*2 → 5.11 [3-4] Paging Group—External Pager
→ [641] External Pagers of a Paging Group

Conditions

- Extensions which cannot be paged are:
  - Portable stations (PSs)
  - Single line telephones (SLTs)
  - Ringing or busy PTs
  - PTs in Paging Deny mode
  - PTs in Paging DND mode
  - IP-PTs connected to a V-IPEXT card, that are assigned to extension user group 31 (default)[*1]

  These extensions cannot be paged, but can answer a page.

  [*1] Changing the extension user group of the extension, allows it to receive pages. However, doing so may affect the number of simultaneous IP extension and IP CO line calls available on the MPR card.
- **External Pager Priority**
  External pagers can be used with the following priorities:
  Trunk Answer From Any Station (TAFAS) → Paging → Background Music (BGM)
  (→ 17.1.2 TAFAS (Trunk Answer From Any Station), → 2.1.1 BGM (Background Music))
- **Volume Control**
  The volume level of pages heard from PTs and external pagers can be changed through system programming.
- **Paging DND**
  When Do Not Disturb (DND) (→ 4.1.10 DND (Do Not Disturb)) is set for incoming calls, it is programmable whether an extension receives paging through system programming.

PC Programming Manual References

4.9 [2-6-1] Numbering Plan—Main—Features
→◆ Group Paging
→◆ Group Paging Answer
→◆ Paging Deny Set / Cancel
4.18 [2-9] System Options
→Option 1—◆ PT Fwd / DND—Paging to DND Extension
→Option 3—◆ Confirmation Tone—Tone 2 : Paged / Automatic Answer
4.20 [2-11-1] Audio Gain—Paging/MOH
→◆ Paging—EPG (External Pager) (for KX-NCP series)/EPG 1 (External Pager 1) (for KX-TDE series)
→◆ Paging—EPG 2 (External Pager 2) (KX-TDE series only)
→◆ Paging—Paging Level from PT Speaker
5.9 [3-4] Paging Group
5.10 [3-4] Paging Group—All Setting
5.11 [3-4] Paging Group—External Pager
6.1 [4-1-1] Wired Extension—Extension Settings

PT Programming Manual References

[640] Extension User Groups of a Paging Group
[641] External Pagers of a Paging Group

Feature Manual References

21.1 Capacity of System Resources

Operating Manual References

1.3.48 Paging

13.1.2 Paralleled Telephone

Description

By connecting telephones in parallel, you can increase the number of telephones connected to the PBX without adding additional extension cards.
Both wired and wireless telephones can be connected in parallel. Single line telephones (SLTs), analog proprietary telephones (APTs), and digital proprietary telephones (DPTs) can be connected to other telephones or connectors, allowing up to three telephones to be connected to the PBX through just one extension port. Additionally, portable stations (PSs) can be linked to other telephones wirelessly and used as "paired" extensions.
The different type of parallel connections are described below.

Features	Descriptions	Connections
Parallel Mode	Allows an SLT to be connected to an APT or DPT which is connected to a Super Hybrid port of the PBX. When parallel mode is enabled, the two telephones function as follows: • Both share the extension number of the telephone connected directly to the PBX (main telephone). • Either telephone can make or answer a call.	**APT/DPT + SLT** 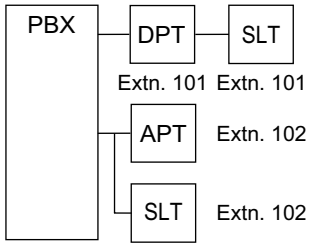
EXtra Device Port (XDP) Mode	Allows an SLT to be connected to a DPT which is connected to a Super Hybrid port of the PBX. Unlike parallel mode, XDP mode allows each telephone to act as an independent extension with its own extension number. (→ 5.1.7 Extension Port Configuration)	**DPT + SLT** 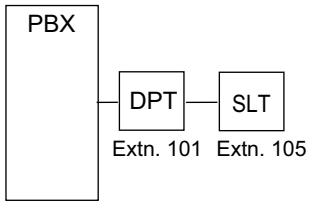

Features	Descriptions	Connections
Digital XDP	Allows a DPT to be connected to another DPT which is connected to a DPT port or a Super Hybrid port of the PBX. The DPT that is connected directly to the PBX is called the "master DPT", and the DPT connected to the master DPT is called the "slave DPT". Similar to XDP mode, each DPT acts as a independent extension with its own extension number. If a master DPT is connected to the PBX by a Super Hybrid port (not a DPT port), a third telephone (SLT) can also be in parallel or XDP mode with the master DPT. Digital XDP connection allows the number of DPTs that the PBX supports to increase.	**DPT + DPT** 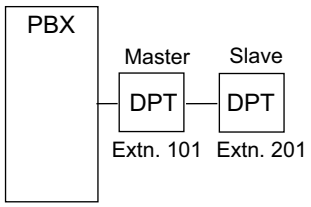 **DPT + DPT + SLT** 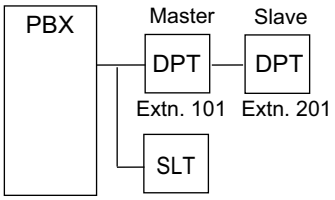 Extn. 101 (in Parallel Mode) or Extn. 105 (in XDP Mode)
Wireless XDP Parallel Mode	For information on this type of parallel connection, refer to the Wireless XDP Parallel mode feature. (→ 20.1.5 Wireless XDP Parallel Mode)	**APT/DPT/SLT + PS** 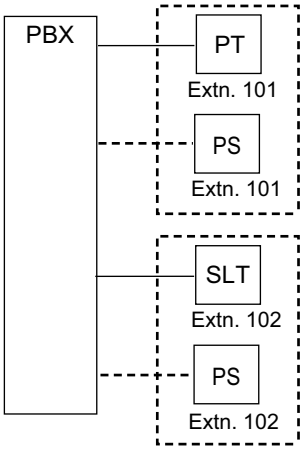

Conditions

[APT + SLT]

- If one telephone goes off-hook while the other is on a call, a three-party call is established. If one user goes on-hook, the other user continues the call.
- An extension user cannot originate a call from the SLT if the APT is:
  - playing background music (BGM)
  - receiving a paging announcement over the built-in speaker.
- The SLT will always ring for incoming calls (if its ringer is turned on). It cannot be programmed to not ring.

[DPT + SLT]

- When in the parallel mode, XDP mode of the Super Hybrid port should be turned off through system programming.
- Whether the SLT rings for incoming calls is programmable.
  Ring on: Both telephones ring when a call is received, except for when the digital proprietary telephone (DPT) is in Hands-free Answerback mode (→ 8.1.1 Hands-free Answerback) or voice-calling mode (Alternate Receiving Ring/Voice) (→ 9.1.13 Intercom Call).
  Ring off: Only the DPT rings when a call is received, however, the SLT can be used to answer the call.
- Both telephones cannot engage in calls simultaneously. If one telephone goes off-hook while the other is on a call, the call is switched to the telephone that goes off-hook. Note, however, that the call will not be switched when the telephone is:
  a. Being monitored by another extension (→ 3.1.7 Call Monitor).
  b. Receiving an Off-hook Call Announcement (OHCA) (→ 12.1.3 OHCA (Off-hook Call Announcement)) or Whisper OHCA (→ 20.1.4 Whisper OHCA).
  c. On a conference call (→ 3.1.19 Conference, → 5.1.3 Executive Busy Override, → 13.1.14 Privacy Release).
  d. Using Live Call Screening (LCS) or Two-way Record is activated (→ 19.1.4 Voice Mail DPT (Digital) Integration).

[DPT + DPT]

- **Available Telephones**
  KX-DT300 series and KX-T7600 series, except KX-T7640
- The PSU-M or PSU-L must be installed when Digital XDP connection enables the number of DPTs to exceed the maximum capacity that the PBX supports.
- The following features cannot be used on either the master or slave DPT:
  a. OHCA: A call waiting tone will be heard even if the OHCA feature is set.
  b. USB Module/Bluetooth Module: The DPTs will not function properly if a USB Module or Bluetooth Module is attached to either DPT. Do not connect a USB Module or Bluetooth Module to either of the DPTs.

Note

To cancel a Digital XDP connection, disconnect the slave DPT from the master, then disconnect the and reconnect the master DPT to the PBX.

[DPT + DPT + SLT]

- When an SLT is connected to the slave DPT in parallel mode, the SLT acts as a parallel extension of the master DPT. If connected in XDP mode, the SLT acts as an independent extension.

Installation Manual References

KX-NCP500/KX-NCP1000

1.3.3 System Capacity
3.8.2 Parallel Connection of the Extensions
3.8.3 Digital EXtra Device Port (Digital XDP) Connection

KX-TDE100/KX-TDE200

1.3.3 System Capacity
3.8.2 Parallel Connection of the Extensions
3.8.3 Digital EXtra Device Port (Digital XDP) Connection

KX-TDE600

1.3.3 System Capacity
3.10.2 Parallel Connection of the Extensions
3.10.3 Digital EXtra Device Port (Digital XDP) Connection

PC Programming Manual References

3.24 [1-1] Slot—Port Property - Extension Port
→◆ XDP Mode
→◆ Parallel Telephone Ringing
4.9 [2-6-1] Numbering Plan—Main—Features—◆ Parallel Telephone (Ring) Mode Set / Cancel

PT Programming Manual References

[600] EXtra Device Port (XDP) Mode

Operating Manual References

1.3.49 Paralleled Telephone

13.1.3 Password Security

Description

To maintain system security, system passwords are required to access certain programming functions of the PBX. By giving different users access to different passwords, it is possible to control the amount of programming that each user is able to perform.
The following types of system passwords are available:

Password		Description	Format
PT	System Password (PT) for User	Used to access user-level PT programming. The specific PT programming items that may be programmed at user level can be selected through system programming item.	4 – 10 digits
	System Password (PT) for Administrator	Used to access administrator-level PT programming. All PT programming settings are available.	
PC	System Password (PC) for User	Used with the user-level programmer code to access user-level PC programming. The installer can specify which system programming settings are available.	4 – 10 characters
	System Password (PC) for Administrator	Used with the administrator-level programmer code to access administrator-level PC programming. The installer can specify which system programming settings are available.	
	System Password (PC) for Installer	Used with the installer-level programmer code to access installer-level PC programming. All system programming settings are available.	

CAUTION

To the Administrator or Installer regarding the system password

1. Please provide all system passwords to the customer.
2. To avoid unauthorized access and possible abuse of the PBX, keep the passwords secret, and inform the customer of the importance of the passwords, and the possible dangers if they become known to others.
3. The PBX has default passwords preset. For security, change these passwords the first time that you program the PBX.

4. Change the passwords periodically.
5. It is strongly recommended that passwords of 10 numbers or characters be used for maximum protection against unauthorized access. For a list of numbers and characters that can be used in system passwords, refer to Section 1.1.2 Entering Characters in the PC Programming Manual.
6. If a system password is forgotten, it can be found by loading a backup of the system data into a PC, and checking the password using the Maintenance Console software. If you do not have a backup of the system data, you must reset the PBX to its factory defaults and reprogram it. Therefore, we strongly recommend maintaining a backup of the system data. For more information on how to back up the system data, refer to the PC Programming Manual.
   However, as system passwords can be extracted from backup copies of the system data file, do not allow unauthorized access to these files.

PC Programming Manual References

1.1.2 Entering Characters
2.1.2 Access Levels
13.1 [11-1] Main—Password

Feature Manual References

21.1 Capacity of System Resources

13.1.4 Pause Insertion

Description

Pressing a PAUSE button inserts a preprogrammed Pause time between digits of a user-dialed number before the number is dialed out, allowing certain numbers separated with a pause to be used to access certain features (e.g., access codes, seizing idle lines, etc.).
When a pause is needed, pauses must be inserted manually (pressing the PAUSE button) in all cases, except for the following access codes where a pause is automatically inserted between the user-dialed access code and the subsequent digits:

a. Host PBX Access code (→ 8.1.5 Host PBX Access Code (Access Code to the Telephone Company from a Host PBX))
b. Special Carrier Access code (→ 16.1.6 Special Carrier Access Code)
c. Second Dial Tone Waiting code

Conditions

- The length of a pause is programmable for each CO line.
- Numbers stored in Memory Dialing can contain pauses.
- When a Second Dial Tone Waiting code is dialed after seizing a CO line, a preprogrammed number of pauses are inserted after the code.
- **ARS**
  A pause is not automatically inserted between the user-dialed access code and the subsequent digits when the ARS mode is enabled. (→ 1.1.3 ARS (Automatic Route Selection))

PC Programming Manual References

3.30 [1-1] Slot—Port Property - LCO Port—◆ Pause Time
3.36 [1-1] Slot—Port Property - T1 Port—◆ Pause Time

4.5 [2-3] Timers & Counters—Miscellaneous—◆ During Conversation—Pause Signal Time
8.4 [6-4] Second Dial Tone

PT Programming Manual References

[416] LCOT Pause Time

13.1.5 PC Console/PC Phone

Description

Panasonic PC Console/PC Phone is supported by a PC with a KX-DT343/KX-DT346 or KX-T7633/KX-T7636 DPT (equipped with USB module) through USB ports. By using the KX-TDA0350 PC Phone or KX-TDA0300 PC Console CTI application, users can enjoy many PBX features while utilizing the benefits of a CTI solution. PC Console gives users access to certain administrative level features that are not available with PC Phone.
The extensions that use PC Console must be assigned through system programming. A CTI server is not required to use PC Phone/PC Console.

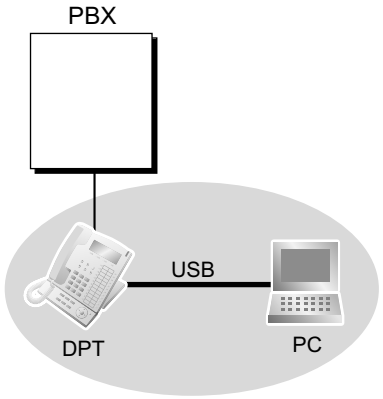

Along with many PBX features, PC Phone and PC Console offer many specific features, including the following:

- **Phone Book:**
  A list of telephone numbers including detailed information pertaining to each entry. This feature allows the user to make calls and send e-mails to each entry.
- **Outlook Integration:**
  The Microsoft® Outlook® Address Book can be integrated to be used with the PC Phone or PC Console.
- **Pop-up Screen:**
  An image containing information about the caller appears when a call is received.
- **Voice Memo:**
  Conversations are recorded at any time and can be saved, sent by e-mail, etc.
- **Text Memo:**
  A user can type a short message during a conversation which can be saved, sent by e-mail, etc.

[For PC Phone Only]

- **TAM (Telephone Answering Machine):**
  If a call is not answered within a preprogrammed time, callers can leave a message after hearing a greeting message.
- **Message:**
  TAM messages are played back and/or automatically transferred by phone or by e-mail.

[For PC Console Only]

- **Incoming Group Screen:**
  Names, extension numbers, and the status (e.g., busy) of each extension can be monitored on a single screen. Calls can also be made and received on this screen.

Conditions

- **Hardware Requirements:** KX-DT343/KX-DT346 or KX-T7633/KX-T7636 DPT and USB Module

Installation Manual References

KX-NCP500/KX-NCP1000

3.8.4 First Party Call Control CTI Connection

KX-TDE100/KX-TDE200

3.8.4 First Party Call Control CTI Connection

KX-TDE600

3.10.4 First Party Call Control CTI Connection

PC Programming Manual References

3.24 [1-1] Slot—Port Property - Extension Port
→◆ DPT Type—Type
→◆ DPT Type—Location No.

PT Programming Manual References

[601] Terminal Device Assignment

Feature Manual References

21.1 Capacity of System Resources

13.1.6 PC Programming

Description

Although many PBX features can be programmed using a proprietary telephone (PT) (→ 13.1.32 PT Programming), a PC connected to the PBX can use the Maintenance Console software to program in further detail. System programming, diagnosis, and data upload/download can be performed either through on-site programming or remote programming.

1. **On-site Programming:** Programming that is performed using an on-site PC connected directly to the PBX.
2. **Remote Programming:** Programming that is performed using an off-site PC that connects to the PBX via a CO line.

1. Connection Methods for On-site Programming

Method	Description	Required Hardware
Serial Interface (RS-232C) port	The PC is connected to the PBX via the Serial Interface (RS-232C port) of the PBX.	–
USB	The PC is connected to the PBX via the USB port of a USB Module attached to a digital proprietary telephone (DPT).	USB Module
LAN	The PC is connected to the PBX via the MNT port of the MPR card.	MPR card
Modem (connected to SLT port)[*1]	The PC is connected to a modem, which is then connected to an SLT port of the PBX. Use the modem to dial the floating extension number (default: 599) assigned to the analog remote maintenance feature to access the PBX.	RMT card and user-supplied modem

[*1] Remote access must be enabled through system programming when performing on-site programming via modem.

2. Connection Methods for Remote Programming

Method	Description	Required Hardware
Off-site modem	Call the PBX and have the call directed to the floating extension number (default: 599) assigned to the analog remote maintenance feature using one of the following methods: **Direct Access:** Using the off-site modem, dial a telephone number with the modem which will direct your call (via Direct In Line (DIL) or Direct Inward Dialing (DID) distribution) to the floating extension number assigned to the analog remote maintenance feature. **DISA:** Using a telephone, dial a telephone number which will direct your call (via DIL or DID distribution) to a floating extension number used by the Direct Inward System Access (DISA) feature (→ 4.1.8 DISA (Direct Inward System Access)). Next, dial the floating extension number assigned to the analog remote maintenance feature. Then access the PBX with the modem. **Call Transfer:** Using a telephone, dial a telephone number which will direct your call to an operator (or other extension of the PBX) and request to be transferred to the floating extension number assigned to the analog remote maintenance feature (→ 3.1.11 Call Transfer). Then access the PBX with the modem.	RMT card and user-supplied modem

Method	Description	Required Hardware
On-site modem	The modem is connected to the Serial Interface (RS-232C port) and also to either an extension port which is assigned as the DIL/DID destination, or to a CO line directly. AT commands can be sent to the modem automatically when it is connected to the Serial Interface (RS-232C port) and can be programmed beforehand, through system programming, to initialize the modem. AT commands can also be sent manually in the PT system programming mode.	User-supplied modem

Conditions

- Only one system programming session is permitted at a time. Access will be denied when a second party tries to perform system programming, including system programming via a PT.
- **Programmer Code and Password for System Programming**
  To access system programming, a programmer code and its password must be entered. For more details, see Section 13.1.3 Password Security.
- **Remote Programming Limitation**
  It is possible to disable remote access through system programming. Disabling this feature will also disable the ability to perform on-site programming via modem.
- If an extension user sets Walking Extension at the same time that the extension's data is being programmed through PC programming, the data may not be transferred properly. (→ 20.1.2 Walking Extension)

Installation Manual References

KX-NCP500/KX-NCP1000

3.3.1 IPCMPR Card
3.3.3 RMT Card (KX-TDA0196)
4.1 Overview
4.2 PC Connection
4.3 Installation of the Maintenance Console

KX-TDE100/KX-TDE200

3.3.1 IPCMPR Card
3.3.4 RMT Card (KX-TDA0196)
4.1 Overview
4.2.1 PC Connection
4.3 Installation of the Maintenance Console

KX-TDE600

3.3.1 IPCEMPR Card
3.3.4 RMT Card (KX-TDA0196)
4.1 Overview
4.2 PC Connection
4.3 Installation of the Maintenance Console

PC Programming Manual References

13.1 [11-1] Main
→RS-232C—◆ External Modem Command—Automatic Initialization
→RS-232C—◆ External Modem Command—Manual Initialization 1–Manual Initialization 5

→Remote
→Password—◆ System Password - PC Programming—User Level
→Password—◆ System Password - PC Programming—Administrator Level
→Password—◆ System Password - PC Programming—Installer Level

PT Programming Manual References

[801] External Modem Control
[810] Remote Programming
[811] Modem Floating Extension Number
[812] ISDN Remote Floating Extension Number

Feature Manual References

4.1.6 DID (Direct Inward Dialing)
4.1.7 DIL (Direct In Line)
13.1.3 Password Security

13.1.7 PDN (Primary Directory Number)/SDN (Secondary Directory Number) Extension

Description

Primary Directory Number (PDN) buttons and Secondary Directory Number (SDN) buttons are ideal for use between bosses and secretaries. When a call (intercom or CO) arrives at a PDN button on the boss's extension, the call will ring and the LED of the SDN button will flash at the secretary's extension as well, indicating that an incoming call is arriving at the boss's extension. In addition, caller information (e.g., Caller ID) of the incoming call will appear on the secretary's extension. The secretary can answer the call for the boss by simply pressing the SDN button. Delayed ringing can be set for a PDN or SDN button.
A secretary can hold a call answered on the SDN button, and the boss can retrieve the held call simply by pressing the PDN button, like when answering a call with an S-CO button. In addition, a secretary can transfer calls from an SDN button or other button (e.g., S-CO button) to the boss's extension with a simple operation, like when using a DSS button.
An extension can have several SDN buttons, each registered to a different boss's extension. However, only one SDN button can be registered for a single boss at each extension. An extension can have up to eight PDN buttons. PDN buttons can simplify the use of an extension because both intercom and CO line calls can be made and received at a PDN button.

Making Calls with an SDN Button

When Standard SDN Key mode is assigned to an SDN extension (secretary) through COS programming, SDN extensions (secretaries) can make calls for PDN extensions (bosses) on the SDN button. For example, a boss can ask a secretary to make a call and put the call on hold, after which, the boss can retrieve the held call.
Through COS programming, it is possible to allow an SDN extension to make calls using the COS of the PDN extension. All other settings that are available when using the Walking COS feature are also applied (→ 20.1.1 Walking COS).

SDN Direct Dial

An SDN extension can call a PDN extension or transfer a call to a PDN extension using an SDN button. In this case:

– Only the PDN extension rings (i.e., other SDN extensions do not ring).
– The delayed ringing and DND settings of the PDN extension are ignored.

Depending on the mode selected through COS programming, SDN Direct Dial is performed in one of two ways, as follows:

– Enhanced DSS Key mode: pressing the SDN button once.
– Standard SDN Key mode: pressing the SDN button twice (a dial tone is heard the first time the SDN button is pressed).

Calls answered using the SDN button can be transferred to the PDN extension by simply pressing the SDN button once, regardless of the mode.

LED Indication

The LED patterns and the corresponding status of PDN and SDN buttons are as follows:

Light Pattern	PDN Button Status	SDN Button Status
Off	This extension is idle.	The corresponding PDN extension is idle.
Green on	The extension is on a call using the PDN button.	The extension is on a call using the SDN button.
Slow green flashing	A call is on hold using the PDN button.	A call is on hold using the SDN button.
Moderate green flashing	• A call on a PDN button is on Exclusive Call Hold or consultation hold. • The PDN extension is adding a member to a conference or using the line for an Unattended Conference, on a PDN button.	• A call answered using the SDN button is on Exclusive Call Hold or consultation hold. • The SDN extension is adding a member to a conference, or using the line for an Unattended Conference.
Rapid green flashing	An incoming call is arriving at this extension.	Receiving Hold Recall or automatic callback ringing from a call answered using the SDN button.
Red on	A corresponding SDN extension is: • on a call. • holding the line using Exclusive Call Hold or consultation hold. • adding a member to a conference. • using the line for an Unattended Conference. • receiving Hold Recall or automatic callback ringing.	The corresponding PDN extension or another corresponding SDN extension is: • on a call. • holding the line using Exclusive Call Hold or consultation hold. • adding a member to a conference. • using the line for an Unattended Conference. • receiving an incoming call directed only to the PDN extension (e.g., callback ringing).
Slow red flashing	A call is on hold by a corresponding SDN extension.	A call is on hold by the corresponding PDN extension or another corresponding SDN extension.
Rapid red flashing	A call is arriving at an Incoming Call Distribution (ICD) group in Ring Distribution method that this extension is a member of.	The corresponding PDN extension is receiving an incoming call.

When multiple calls are on a PDN extension, the LED pattern that appears on the corresponding SDN buttons is displayed according to the following priority:
Receiving an incoming call → holding a call → on a call → idle

For example, if a PDN extension receives an incoming call while on a call, the LEDs on the corresponding SDN extensions will show the incoming call.
However, if an SDN extension is handling a call using the SDN button (e.g., on a call, has a call on hold, etc.), the status of that call will be displayed on the SDN button, regardless of the call status of the PDN extension.

Example of a Secretary Handling Calls for Multiple Bosses

The following example shows the LED patterns of the PDN and SDN buttons of each extension and how calls can be handled.

1. A Call From 111-1111 Arrives at Ext. 101

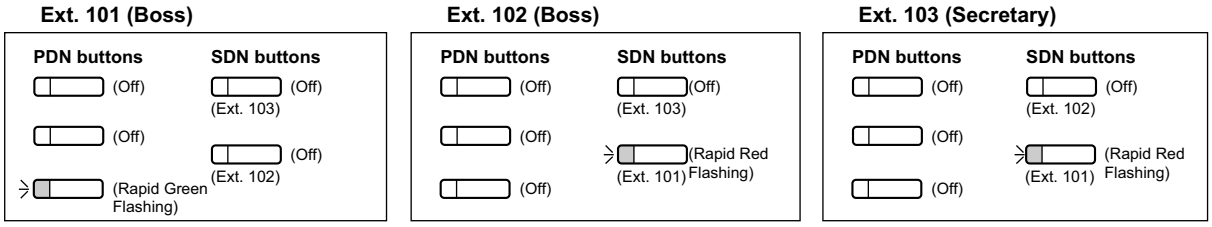

2. The Call From 111-1111 is Answered by Ext. 103

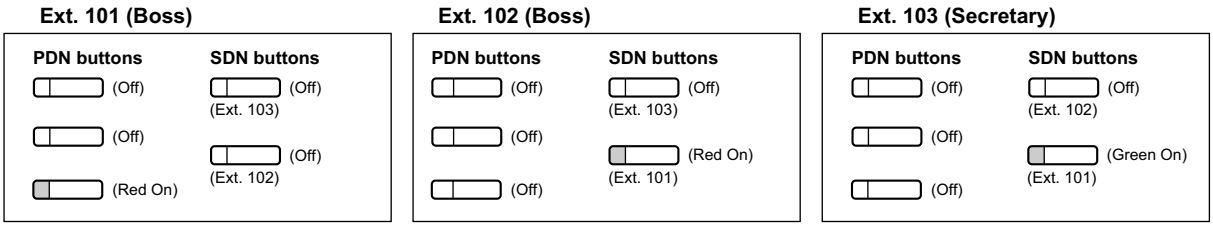

3. The Call From 111-1111 is On Hold by Ext. 103

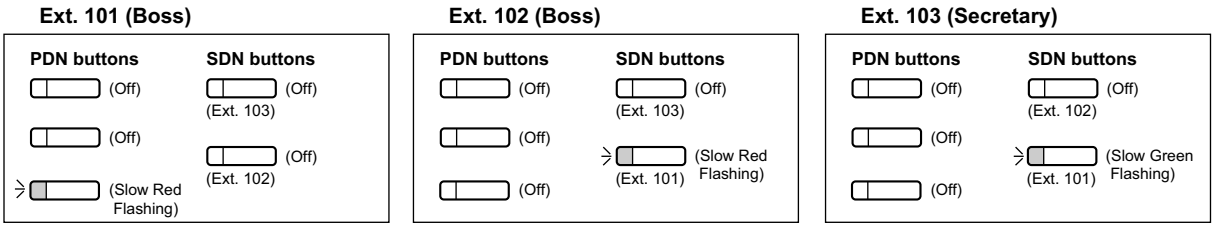

4. The Call Held by Ext. 103 is Answered by Ext. 101

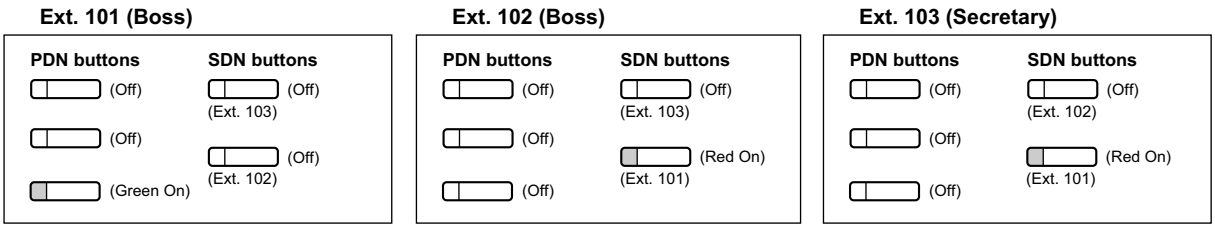

5. A Call From 222-2222 Arrives at Ext. 101

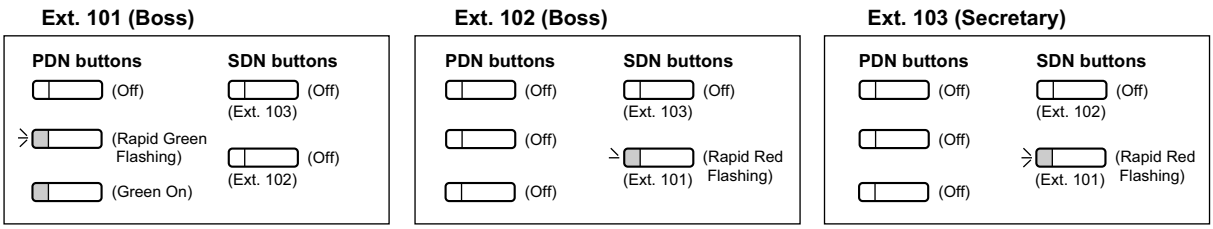

6. A Call From 333-3333 Arrives at Ext. 102

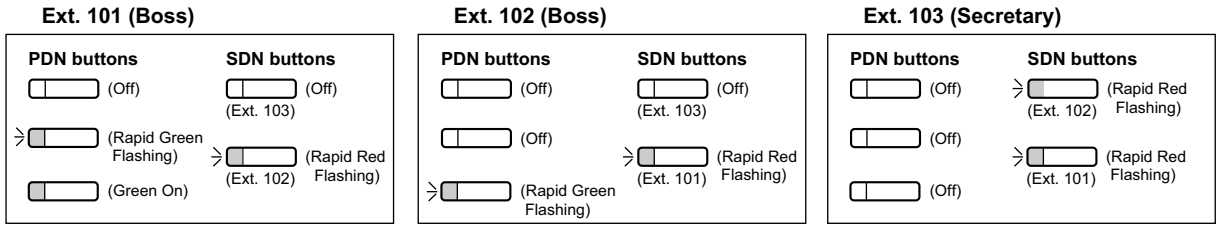

7. The Call From 333-3333 is Answered by Ext. 103

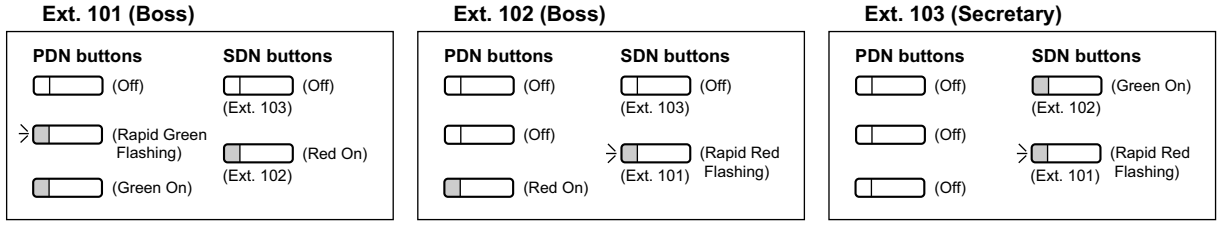

8. The Call From 333-3333 is Transferred by Ext. 103 to Extension 102

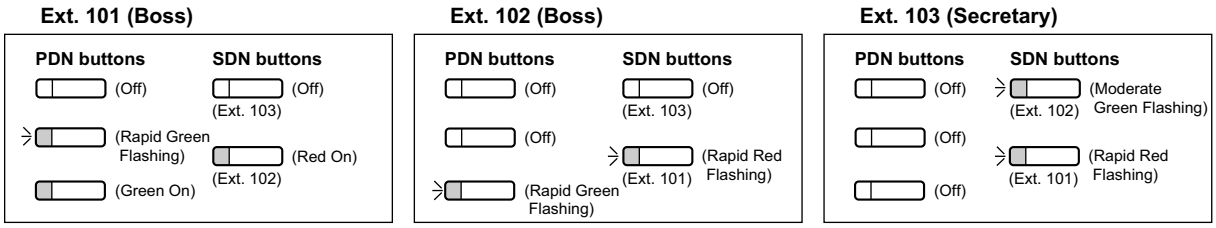

Conditions

[General]

- A flexible button of a PT and a PS can be customized as a PDN or SDN button. A flexible button on a DSS Console can be customized as an SDN button.
- An extension can have up to eight PDN buttons.
- If none of an extension's PDN buttons are idle, the extension will not receive incoming calls, including Call Waiting. Therefore, it is strongly recommended for PDN extensions to have at least three PDN buttons.
- Through COS programming, it is possible to select whether extensions can create SDN buttons on their own extensions using PT programming.
- Up to eight different extensions can assign SDN buttons corresponding to the same PDN extension.
- When a PDN extension has an idle CO line button or ICD Group button, calls will arrive on the following buttons according to the following priority:
  - Incoming intercom calls to an ICD group: ICD Group button → PDN button
  - Incoming CO line calls: S-CO button → G-CO button → L-CO button → PDN button
  - Incoming CO line calls to an ICD group: ICD Group button → S-CO button → G-CO button → L-CO button → PDN button
- When multiple calls of the same status (e.g., on hold) are on a PDN extension, the status of the newest call will be displayed on the corresponding SDN extensions. For example, if a PDN extension has two calls ringing, an SDN extension will answer the call that arrived at the PDN extension last, when pressing the SDN button.
- When a PDN extension is a member of an ICD group in Ring Distribution method, and an incoming call arrives at the ICD group, the incoming call status will not appear on the LEDs of the corresponding SDN extensions. (→ 9.1.1 ICD GROUP FEATURES)

- If none of an extension's PDN buttons are idle, DSS buttons of other extensions registered to the PDN extension will turn on red.
- **Ring Tone Pattern**
  Through system programming, each extension can set ring tone patterns for PDN buttons. Ring tone patterns can be assigned separately for each SDN button.
- **Outgoing Line Preference**
  When "PDN" is selected as the outgoing line preference, outgoing calls will originate on the first available PDN button (→ 10.1.3 Line Preference—Outgoing).
- **Incoming Line Preference**
  Through system programming, it is possible for only incoming calls arriving at PDN buttons to be answered simply by going off-hook, by selecting "PDN" as the incoming line preference (→ 10.1.2 Line Preference—Incoming). This prohibits calls that arrive on non-PDN buttons (e.g., an SDN button) to be answered when going off-hook.
- **Walking Extension**
  For PDN extensions, the Walking Extension feature can only be used when all PDN buttons are idle (→ 20.1.2 Walking Extension).
- **Wireless XDP Parallel Mode**
  If a PS has PDN or SDN buttons, Wireless XDP Parallel mode cannot be assigned to that PS (→ 20.1.5 Wireless XDP Parallel Mode).
- **OHCA/Whisper OHCA**
  A PDN extension cannot receive OHCA or Whisper OHCA, unless the call is made using a corresponding SDN button (→ 12.1.3 OHCA (Off-hook Call Announcement), → 20.1.4 Whisper OHCA).
- **Alternate Calling—Ring/Voice**
  It is not possible to temporarily change the called party's preset call receiving method (ring tone or voice) when calling a PDN extension, unless the call is made using a corresponding SDN button (→ 9.1.13 Intercom Call).
- Through system programming, it is possible to force an extension to become idle (the SP-PHONE button light will turn off) when a speakerphone call using a PDN/SDN button is put on hold using CTI.

[Delayed Ringing]

- The same delayed ringing setting is applied to all PDN buttons on an extension. Delayed ringing can be assigned separately for each SDN button.
- Through system programming, it is possible to select whether caller information (such as Caller ID) is shown immediately on a PS when a call is received while delayed ringing is set.
- Caller information (such as Caller ID) is not shown immediately on a PT when a call is received while delayed ringing is set.
- SDN buttons can be set to not ring (only flash) for incoming calls. However, this setting is not available for PDN buttons.
- The forward no answer timer starts when a PDN extension starts ringing.

PC Programming Manual References

4.12 [2-7-1] Class of Service—COS Settings—PDN/SDN
4.17 [2-8-3] Ring Tone Patterns—Call from Others—◆ Extension—Ring Tone Pattern Plan 1–8
4.18 [2-9] System Options—Option 4—◆ System Wireless—SDN Delayed Ringing with LCD
4.18 [2-9] System Options—Option 6 (CTI)—◆ CTI Hold—Forced Idle when Hold by PDN/SDN Key
6.1 [4-1-1] Wired Extension—Extension Settings—Option 9—◆ PDN Delayed Ringing
6.5 [4-1-4] Wired Extension—Flexible Button
→◆ Type
→◆ Parameter Selection (for SDN)
→◆ Extension Number (for SDN)
→◆ Optional Parameter (Ringing Tone Type Number) (for Loop CO, Single CO, Group CO, G-DN, SDN)
6.10 [4-2-1] Portable Station—Extension Settings—Option 9—◆ PDN Delayed Ringing

6.13 [4-2-3] Portable Station—Flexible Button
→◆ Type
→◆ Parameter Selection (for SDN)
→◆ Extension Number (for SDN)
6.18 [4-3] DSS Console
→◆ Type
→◆ Parameter Selection (for SDN)
→◆ Extension Number (for SDN)
→◆ Optional Parameter (Ringing Tone Type Number) (for Loop CO, Single CO, Group CO, G-DN, SDN)

Feature Manual References

3.1.23 COS (Class of Service)
9.1.2 ICD Group Features—Group Call Distribution
10.1.1 LED Indication
21.1 Capacity of System Resources

Operating Manual References

1.3.6 Call Hold
1.3.50 PDN (Primary Directory Number)/SDN (Secondary Directory Number) Extension
1.3.74 Walking COS

13.1.8 Peer-to-Peer Connection

Description

This PBX automatically establishes peer-to-peer communication between peer-to-peer compatible IP extensions (i.e., IP-PTs and SIP extensions). Non-peer-to-peer IP extension calls are routed through the DSP card. However, with peer-to-peer calls, the call is routed directly from one IP extension to another without going through a DSP card. In other words, peer-to-peer calls can be made without using the PBX's resources.

Conditions

- Peer-to-peer calls can only be made between extensions connected to the PBX through the MPR card.
- The following IP telephones are peer-to-peer compatible for calls between each other:
  – KX-NT265 (version 2.00 or later)[*1]
  – KX-NT300 series
  – KX-NT400
  – KX-NT500 series
  – SIP Extensions
  [*1] For details about checking the version of the KX-NT265, refer to the Installation Manual.
- Three codecs are used for peer-to-peer calls: G.722, G.711, and G.729A. The speech quality of the codecs varies as follows: (High) G.722, G.711, G.729A (Low).
  When the preferred codec of each party differs, the call will be established using the lower codec. For example, if the caller prefers G.711 while the called party prefers G.729A, the call will be established using G.729A.
- G.722 is only available for calls between KX-NT400 IP-PTs, KX-NT300 series IP-PTs, KX-NT500 series IP-PTs, and some SIP extensions that support this codec during peer-to-peer communication.
- Through system programming, it is possible to assign a specific type of codec to be used for each extension.
- For SIP extensions, the priority of the codec that will be used can be specified on a SIP extension basis.

- For non-peer-to-peer calls via the DSP card, calls cannot be made or received when all of the card's resources are being used.

Installation Manual References

KX-NCP500/KX-NCP1000

1.3.3 System Capacity

KX-TDE100/KX-TDE200

1.3.3 System Capacity

KX-TDE600

1.3.3 System Capacity

PC Programming Manual References

3.15 [1-1] Slot—Port Property - Virtual IP Extension—Option—◆ IP Codec Priority

Feature Manual References

9.1.15 IP-PT (IP Proprietary Telephone)

13.1.9 PING (Packet Internet Groper) Confirmation

Description

It is possible for this PBX to confirm the connection of IP telephones, routers, and hubs within or outside the private network using PING. The PBX will send an Internet Control Message Protocol (ICMP) echo request through the PC programming terminal and receive an ICMP message confirming connection.

Conditions

- This PBX performs PING as follows:
  - Test packet length: 56 bytes
  - Ping attempts: 5
  - Time out length: 1 second
  - Ping interval time: 1 second

PC Programming Manual References

2.6.18 Utility—Ping

13.1.10 Power Failure Restart

Description

When the electricity is turned back on, the PBX restarts, loads its stored data automatically, and logs the event as a System Restart in the error log.

Conditions

- In the event of a power failure, PBX memory is protected by a factory-installed lithium battery. There is no memory loss except the memories of Automatic Callback Busy (Camp-on) (→ 1.1.4 Automatic Callback Busy (Camp-on)) and Call Park (→ 3.1.8 Call Park).

13.1.11 Power Failure Transfer

Description

If the power supply to the PBX fails, specific single line telephones (SLTs) are automatically connected to specific CO lines (**Power Failure Connections**). The PBX will switch from the current connections to the Power Failure Connections, and all existing conversations will be disconnected.
Only CO line conversations handled by Power Failure Connections can be made during a power failure.

Conditions

[General]

- Only CO line calls can be made during a power failure. All other features do not work.
- Through system programming, it is possible to allow CO line calls that are established during a power failure to be maintained even when the power returns and the connection is switched back to the normal configuration from the Power Failure Connection. However, if no special programming is performed, the connection will be dropped when power returns.

[KX-NCP500/KX-NCP1000]

- The analog CO line cards, extension cards, and the number of PFT ports (ports which can be used for Power Failure Connections) are as follows:
  CO Line Cards: LCOT4 (1 PFT port)
  Extension Cards: DHLC4 (1 PFT port)

[KX-TDE100/KX-TDE200]

- The analog CO line cards, extension cards, and the number of PFT ports (ports which can be used for Power Failure Connections) are as follows:
  CO Line Cards: LCOT16 (4 PFT ports), LCOT8 (2 PFT ports)
  Extension Cards: MSLC16 (4 PFT ports), CSLC16 (4 PFT ports), SLC16 (4 PFT ports), DHLC8 (2 PFT ports), SLC8 (2 PFT ports), MCSLC16 (2 PFT ports), MCSLC24 (2 PFT ports)
  Connect only one extension card to one CO line card.

[KX-TDE600]

- The analog CO line cards, extension cards, and the number of PFT ports (ports which can be used for Power Failure Connections) are as follows:
  CO Line Cards: ELCOT16 (4 PFT ports)
  Extension Cards: ECSLC24 (4 PFT ports), EMSLC24 card (4 PFT ports), EMSLC16 (4 PFT ports), CSLC16 (4 PFT ports), ESLC16 (4 PFT ports), DHLC8 (2 PFT ports), SLC8 (2 PFT ports)
  Connect only one extension card to one CO line card.

  Note

  Power Failure Connections must be made within the same shelf. An extension card cannot have a Power Failure Connection with a CO line card of another shelf.

Installation Manual References

KX-NCP500/KX-NCP1000

3.12 Power Failure Connections

KX-TDE100/KX-TDE200

3.6.7 SLC16 Card (KX-TDA0174), MSLC16 Card (KX-TDA0175), and CSLC16 Card (KX-TDA0177)
3.6.8 MCSLC16 Card (KX-TDA1176) and MCSLC24 Card (KX-TDA1178)
3.12.1 Power Failure Connections

KX-TDE600

3.8.7 CSLC16 Card (KX-TDA0177), ESLC16 Card (KX-TDA6174), EMSLC16 Card (KX-TDA6175), ECSLC24 Card (KX-TDA6178), and EMSLC24 Card (KX-TDA6179)
3.14.1 Power Failure Connections

PC Programming Manual References

13.3 [11-3] Power Failure Transfer

13.1.12 Predialing

Description

A display proprietary telephone (PT) user can check and correct the number to be dialed on-hook. The call will be initiated after going off-hook.

Conditions

- **Storing the Predialed Number in Personal Speed Dialing**
  The predialed number can be stored in Personal Speed Dialing by pressing the AUTO DIAL/STORE button (→ 16.1.7 Speed Dialing, Personal). In this case, the extension will enter personal programming mode automatically so that a name can be assigned to the stored number.

Operating Manual References

3.1.2 Personal Programming

13.1.13 Printing Message

Description

An extension user can select a message to be output on SMDR. Up to eight messages can be preprogrammed in the Printing Message table, and are available to all extensions connected to the PBX. A message can contain the "%" symbol, which requires a number to be entered in its place when the message is selected at an extension.
Depending on the content of the preprogrammed messages, this feature can be used to record a variety of information, which can be output on SMDR to, for example, a connected PC.
[Example]
If message 1 is preprogrammed as "Started work", and message 2 as "Finished work", employees can sign in by selecting message 1 when starting work, and sign out by selecting message 2 when finishing. A connected PC can then be used to generate employee work records.

Conditions

- Up to seven "%"s can be stored for each message.

PC Programming Manual References

4.9 [2-6-1] Numbering Plan—Main—Features—◆ Printing Message

Feature Manual References

16.1.4 SMDR (Station Message Detail Recording)
21.1 Capacity of System Resources

Operating Manual References

1.3.51 Printing Message

13.1.14 Privacy Release

Description

By default, all conversations which take place on CO lines, extension lines and doorphone lines are protected from others interrupting the conversation (**Automatic Privacy**).
Privacy Release allows a proprietary telephone (PT) or portable station (PS) user to suspend Automatic Privacy for an existing CO line call on the S-CO button in order to establish a three-party call.
System programming is required to enable or disable this feature.

Conditions

- **S-CO Button**
  Any flexible button can be customized as the S-CO button.
- **Privacy Release Time**
  Privacy is released for five seconds to allow the conversation to be joined.
- This feature overrides Data Line Security (→ 4.1.1 Data Line Security) and Executive Busy Override Deny (→ 5.1.3 Executive Busy Override).

PC Programming Manual References

4.18 [2-9] System Options—Option 1—◆ PT Operation—Privacy Release by SCO key
6.5 [4-1-4] Wired Extension—Flexible Button—◆ Type
6.13 [4-2-3] Portable Station—Flexible Button—◆ Type
6.18 [4-3] DSS Console—◆ Type

Feature Manual References

6.1.3 Flexible Buttons

Operating Manual References

1.3.15 Conference

13.1.15 PRIVATE NETWORK FEATURES

Description

A TIE line is a privately leased communication line between two or more PBXs, which provides cost effective communications between company members at different locations.

Interface

The following interfaces can be used to establish a private network:

Interface	Network Type
T1 (TIE [E & M])	Digital (64 kbps × 24 channels)
PRI (QSIG)	Digital (ISDN 23B+D)
VoIP	Internet Protocol (IP)

The available interfaces depend on the cards installed in the PBX.

Making a TIE Line Call

One of the following two methods can be used to make a TIE line call.

a. Extension Number Method (Access without PBX Code)

Dial the [Extension Number] only.

[Example]

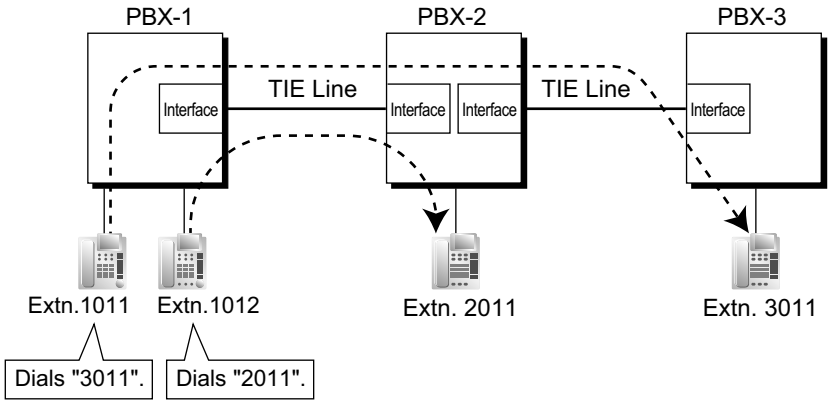

Explanation:

To use this method, it is necessary to change the first one or two digits of extension numbers of either PBX (e.g., 10XX for PBX-1, 20XX for PBX-2) to allow calls to be routed properly.

Case 1:

Extension 1012 of PBX-1 dials extension number "2011".
→ Extension 1012 of PBX-1 is connected to extension 2011 of PBX-2.

Case 2:

Extension 1011 of PBX-1 dials extension number "3011".
→ Extension 1011 of PBX-1 is connected to extension 3011 of PBX-3.

b. PBX Code Method (Access with PBX Code)

Dial the [TIE Line Access Number] + [PBX Code] + [Extension Number].
4.9 [2-6-1] Numbering Plan—Main—Features—◆ TIE Line Access
11.1 [9-1] TIE Table—◆ Own PBX Code

[Example]

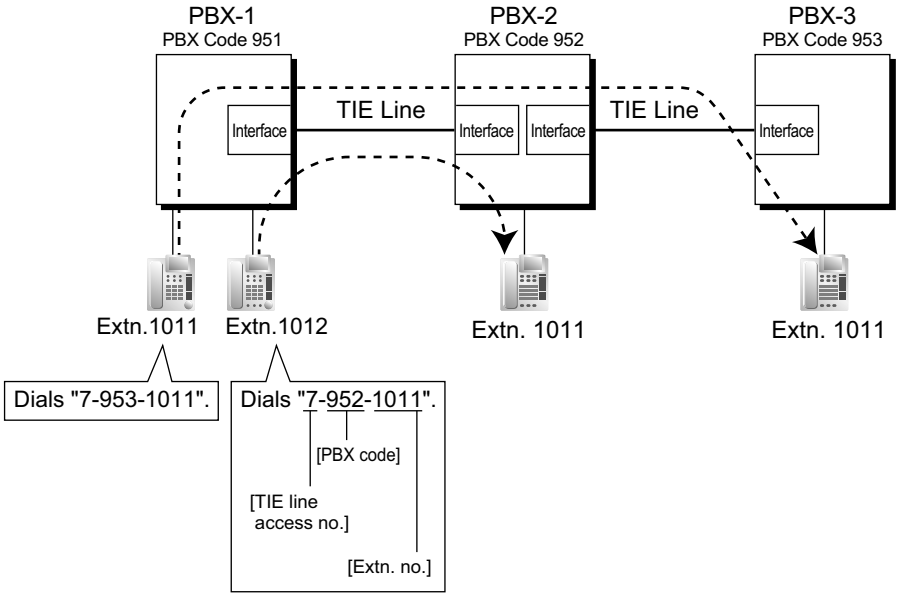

Explanation:

To use this method, it is necessary to know each PBX code in order to identify the location of an extension.

Case 1:

Extension 1012 of PBX-1 dials TIE line access number "7", PBX code "952", and extension number "1011".
→ Extension 1012 of PBX-1 is connected to extension 1011 of PBX-2.

Case 2:

Extension 1011 of PBX-1 dials TIE line access number "7", PBX code "953", and extension number "1011".
→ Extension 1011 of PBX-1 is connected to extension 1011 of PBX-3.

TIE Line and CO Line Connection

To connect the TIE line with the CO line, the following patterns are available:

1. CO Line-to-TIE Access
2. TIE-to-CO Line Access
3. CO Line-to-TIE-to-CO Line Access

CO Line-to-TIE Access

It is possible to assign an extension of another PBX as the destination of incoming CO line calls to the own PBX.
It is also possible to forward calls using a virtual PS. Using this method, CO line calls received at PBX-1 are forwarded directly to the extension at PBX-2, even when using the PBX Code method.

a. Incoming CO Line Call Destination Assignment

[Example]

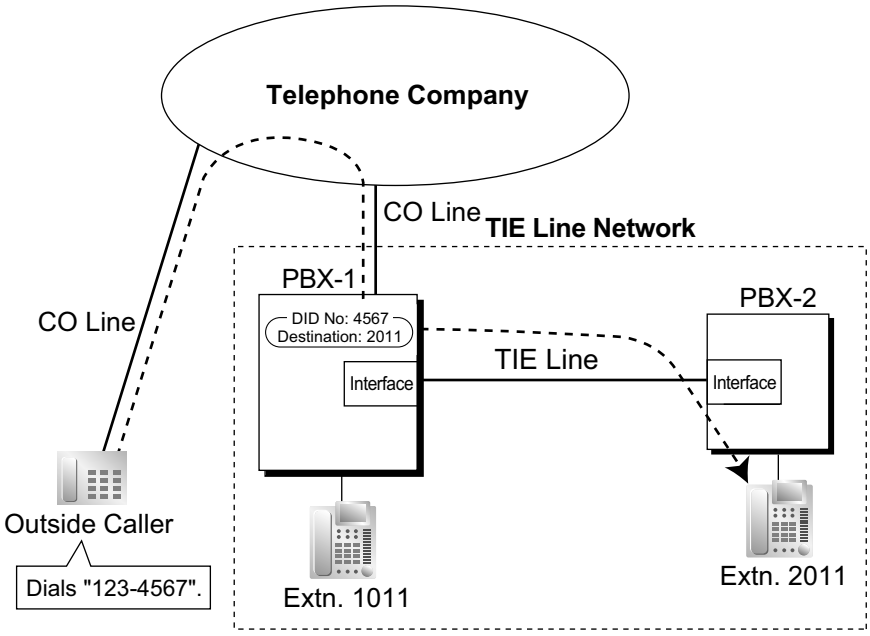

Explanation:

An outside caller dials "123-4567". The call is sent to extension "2011" of PBX-2 through the TIE line according to the assignment of the DID or DIL call destination of PBX-1. (→ 4.1.6 DID (Direct Inward Dialing))

→ 12.3 [10-3] DID Table—◆ DID Destination—Day, Lunch, Break, Night

→ [453] DID Destination

b. FWD/Call Transfer/Intercept Routing to the TIE Line

[Example]

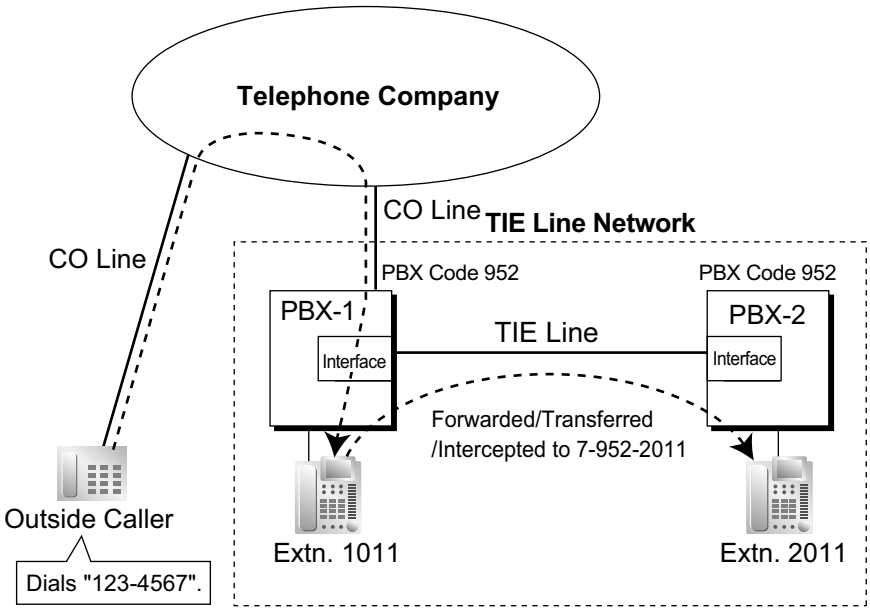

Explanation:

An outside caller dials "123-4567". The call reaches the destination (extension 1011 of PBX-1), and the call is forwarded, transferred, or intercepted to extension "2011" of PBX-2 through the TIE line.

TIE-to-CO Line Access

The PBX sends TIE line calls to the CO lines of another PBX through the TIE lines.

a. CO Line Call through Other PBXs
[Example]

<Extension Number Method (Access without PBX Code)>

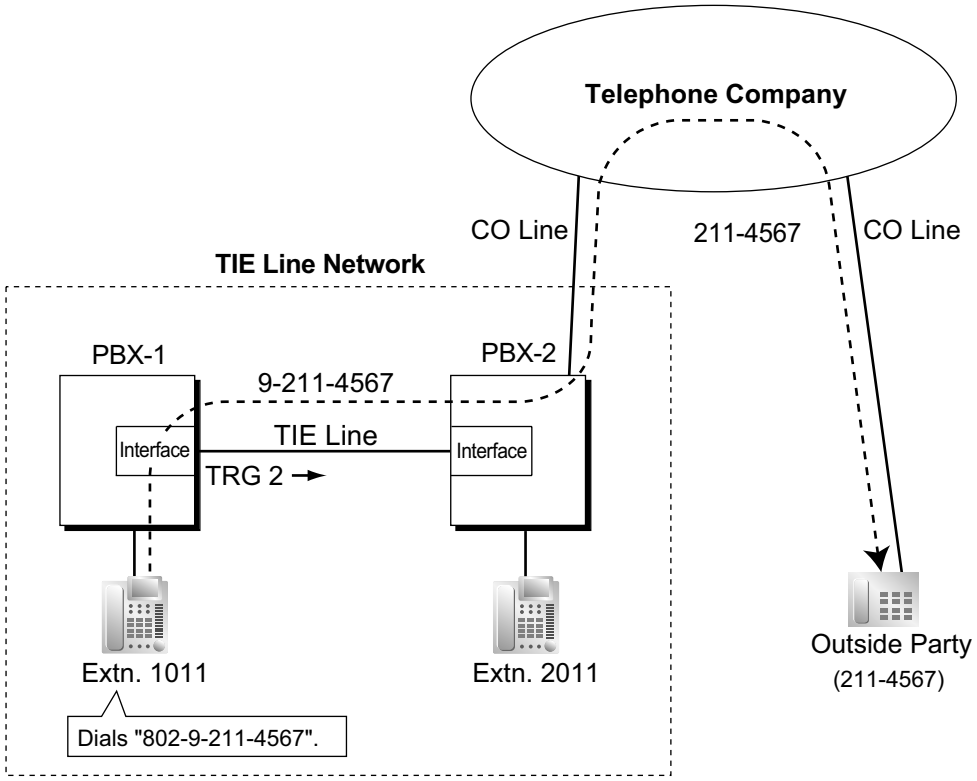

Explanation:

1. Extension 1011 of PBX-1 dials the Trunk Group Access number of PBX-1 "8", trunk group number "02" (TRG2), Idle Line Access number of PBX-2 "9", and telephone number "211-4567".
   → 4.9 [2-6-1] Numbering Plan—Main—Features—◆ Trunk Group Access
2. PBX-1 sends the call to PBX-2 through the trunk group (TRG) 2 (TIE line).
3. PBX-2 sends the call to the outside party "211-4567".

<PBX Code Method (Access with PBX Code)>

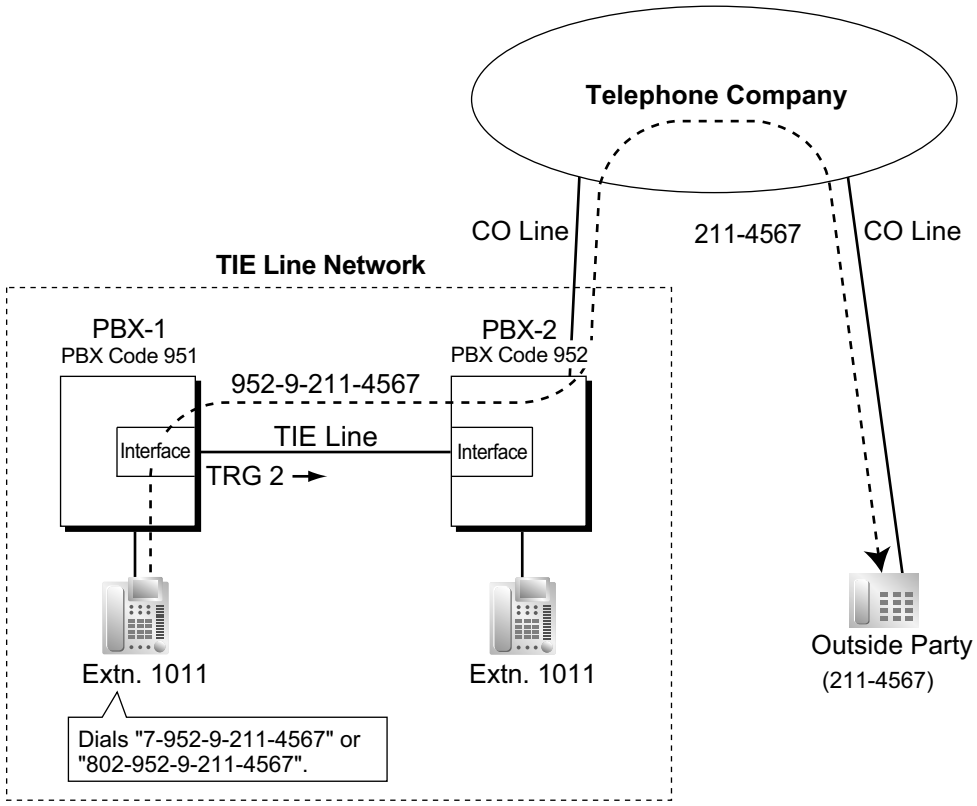

Explanation:

1. Extension 1011 of PBX-1 dials the TIE line access number "7", PBX code "952", Idle Line Access number of PBX-2 "9", and telephone number "211-4567"; or dials the Trunk Group Access number of PBX-1 "8", trunk group number "02" (TRG2), PBX code "952", Idle Line Access number of PBX-2 "9", and telephone number "211-4567".
2. The call is connected to the outside party "211-4567" through PBX-2 which has PBX code "952".

CO Line Call through Other PBXs—by the ARS feature

[Example]

<Extension Number Method (Access without PBX Code) using ARS>

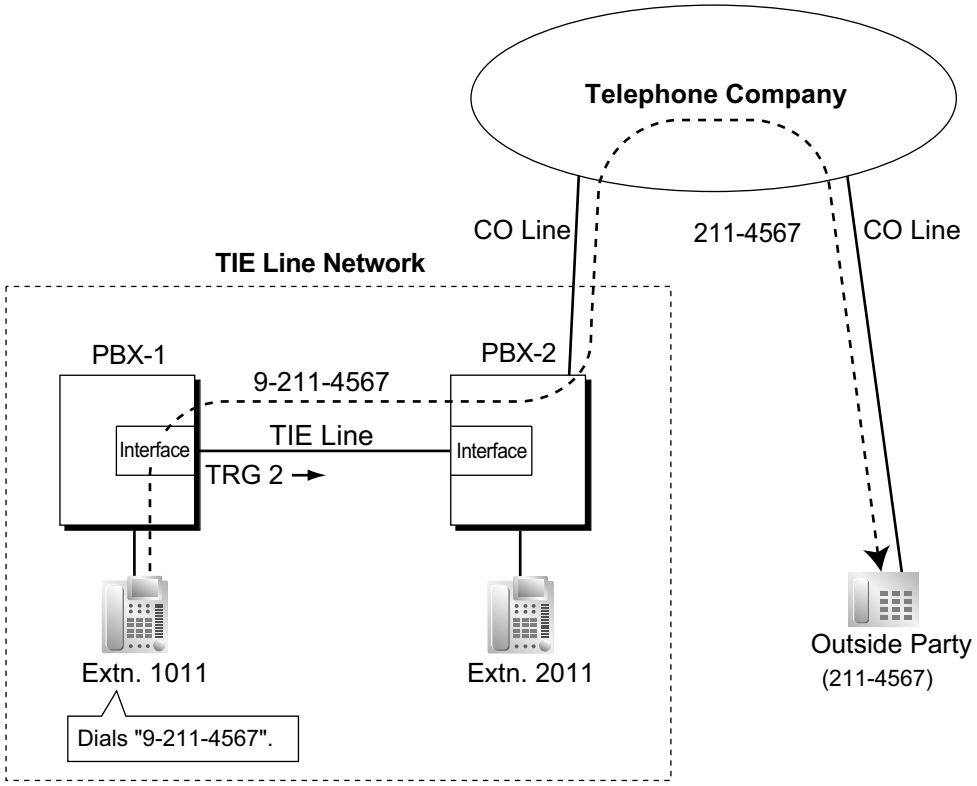

Explanation:

1. Extension 1011 of PBX-1 dials the Idle Line Access number of PBX-1 "9" and telephone number "211-4567".
2. PBX-1 modifies the call (adds the Idle Line Access number of PBX-2 "9") and sends the call to PBX-2 through the TIE line (trunk group [TRG] 2) according to the ARS programming of PBX-1.
3. PBX-2 sends the call to the outside party "211-4567".

<PBX Code Method (Access with PBX Code) using ARS>

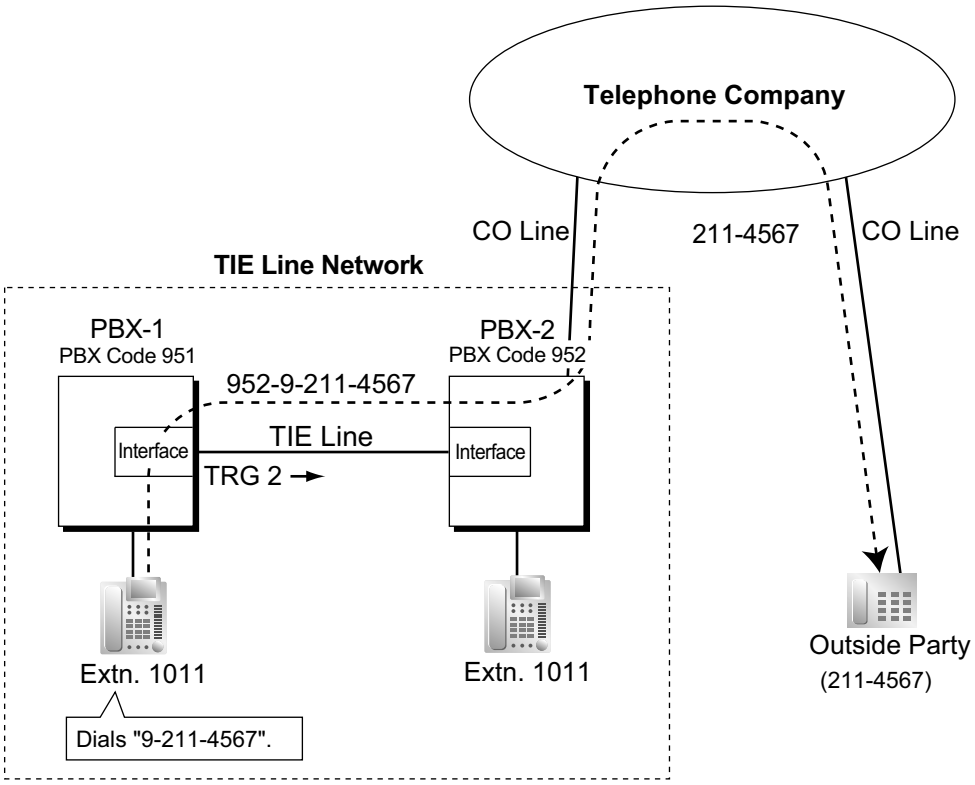

Explanation:

1. Extension 1011 of PBX-1 dials the Idle Line Access number of PBX-1 "9" and telephone number "211-4567".
2. PBX-1 modifies the call (adds "952" and the Idle Line Access number of PBX-2 "9") and sends the call to PBX-2 which has PBX code "952" through the TIE line (trunk group [TRG] 2) according to the ARS programming of PBX-1.
3. PBX-2 sends the call to the outside party "211-4567".

b. Blocking CO line calls made through another PBX and how to override it:

Whether an incoming TIE line call can make a CO line call through this PBX (i.e., PBX-2), depends on the COS that is assigned to the trunk group of this PBX, that the incoming TIE line is connected to. If the COS of the trunk group is unable to make outgoing calls by the TRS or External Call Block feature, CO line calls made through this PBX will be prohibited.

To override this prohibition, an extension of PBX-1 must enter a verification code assigned to PBX-2 to change the COS temporarily. It is also possible to override the prohibition by specifying an extension at PBX-2 with the Walking COS feature, to temporarily switch to that extension's COS.

→ 4.12 [2-7-1] Class of Service—COS Settings—TRS—◆ TRS Level—Day, Lunch, Break, Night
→ 4.13 [2-7-2] Class of Service—External Call Block
→ 5.1 [3-1-1] Trunk Group—TRG Settings—Main—◆ COS
→ 8.3 [6-3] Verification Code
→ [500] Trunk Group Number

[Programming Example of PBX-2]

Trunk Group No.	COS No.
1	3
2	2
3	2
:	:

TRG of Incoming Call	Outgoing Call			
	TRG 1	TRG 2	TRG 3	…
COS 1		✔	✔	
COS 2	✔	✔		✔
COS 3		✔	✔	✔
:	:	:	:	:

✔ : Block

[Example]
<Extension Number Method (Access Without PBX Code)>

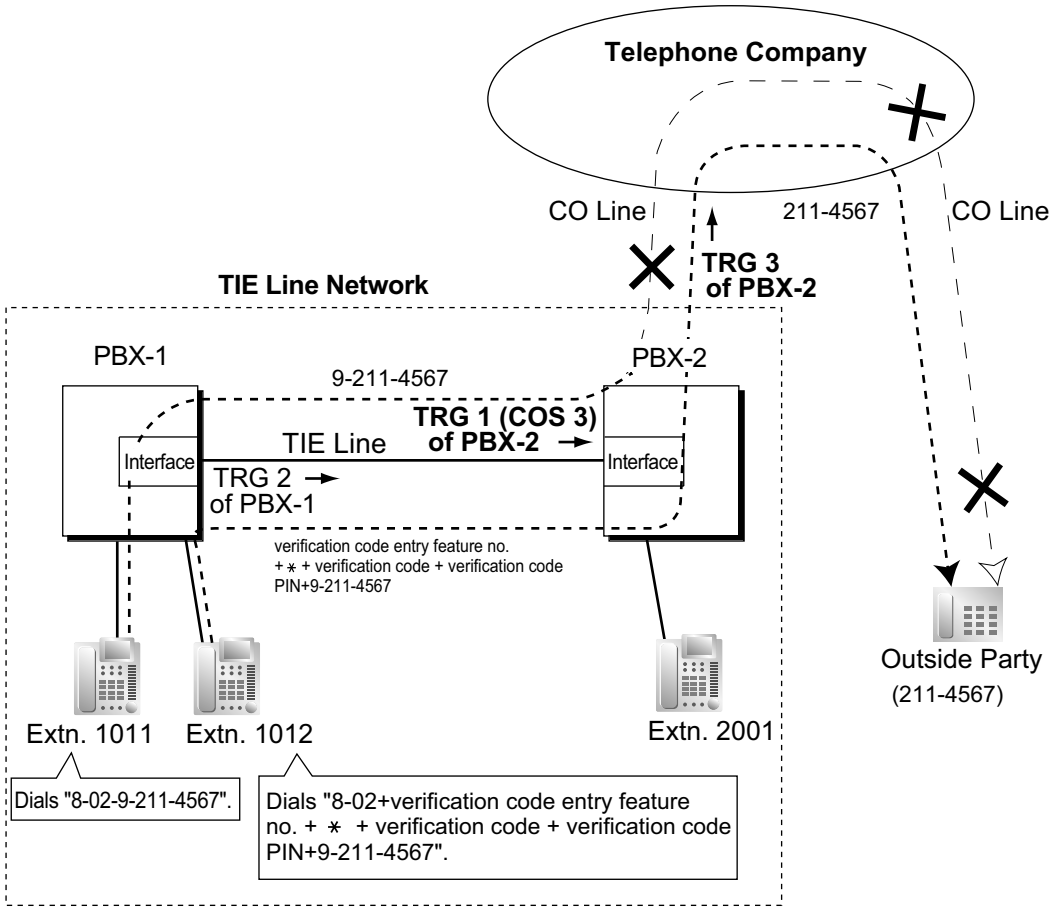

Explanation:

Case 1:

1. Extension 1011 of PBX-1 dials the Trunk Group Access number of PBX-1 "8", TIE line trunk group number (TRG 2), Idle Line Access number of PBX-2 "9", and the telephone number "211-4567".
2. The call is not connected to the outside party through PBX-2 because the COS of TRG 1 (COS 3) is blocked from accessing TRG 3 of PBX-2.

Case 2:

1. Extension 1012 of PBX-1 dials the Trunk Group Access number of PBX-1 "8", TIE line trunk group (TRG2), verification code entry feature number, ✳, verification code, verification code personal identification number (PIN), Idle Line Access number of PBX-2 "9", and the telephone number "211-4567".
2. If the specified verification code applies COS 2 of PBX-2, the call is connected to the outside party through PBX-2, because COS 2 is not blocked from accessing TRG 3 of PBX-2.

<PBX Code Method (Access with PBX Code)>

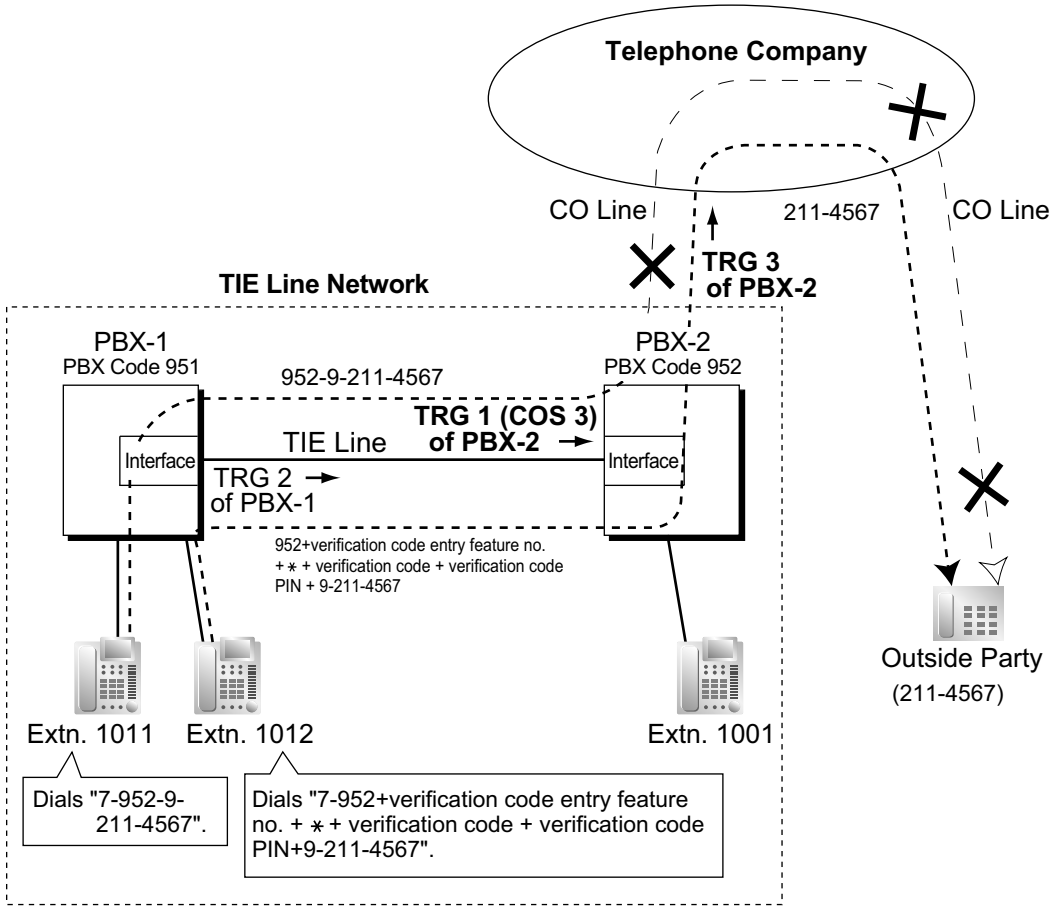

Explanation:

Case 1:

1. Extension 1011 of PBX-1 dials the TIE line access number "7", PBX code "952", Idle Line Access number of PBX-2 "9", and the telephone number "211-4567".
2. The call is not connected to the outside party through PBX-2 because the COS of TRG 1 (COS 3) is blocked from accessing TRG 3 of PBX-2.

Case 2:

1. Extension 1012 of PBX-1 dials the TIE line access number "7", PBX code "952", verification code entry feature number, <✳, verification code, verification code personal identification number (PIN), Idle Line Access number of PBX-2 "9", and the telephone number "211-4567".
2. If the specified verification code applies COS 2 of PBX-2, the call is connected to the outside party through PBX-2, because COS 2 is not blocked from accessing TRG 3 of PBX-2.

c. Override using an Itemized Billing Code for ARS

By assigning an Itemized Billing Code for ARS to PBX-1, an extension's verification code can be sent to PBX-2 automatically, without the extension having to dial the verification code.

→ 6.1 [4-1-1] Wired Extension—Extension Settings—Option 1—◆ ARS Itemized Code/2nd CLIP (10 digits)

→ 6.10 [4-2-1] Portable Station—Extension Settings—Option 1—◆ ARS Itemized Code/2nd CLIP (10 digits)

→ 10.6 [8-5] Carrier

Note

If using an IP-GW card, and the number dialed after ARS modification is over 20 digits, the software of the IP-GW card must be upgraded to its latest version to use this feature.

[Example]
<Extension Number Method (Access without PBX Code)>

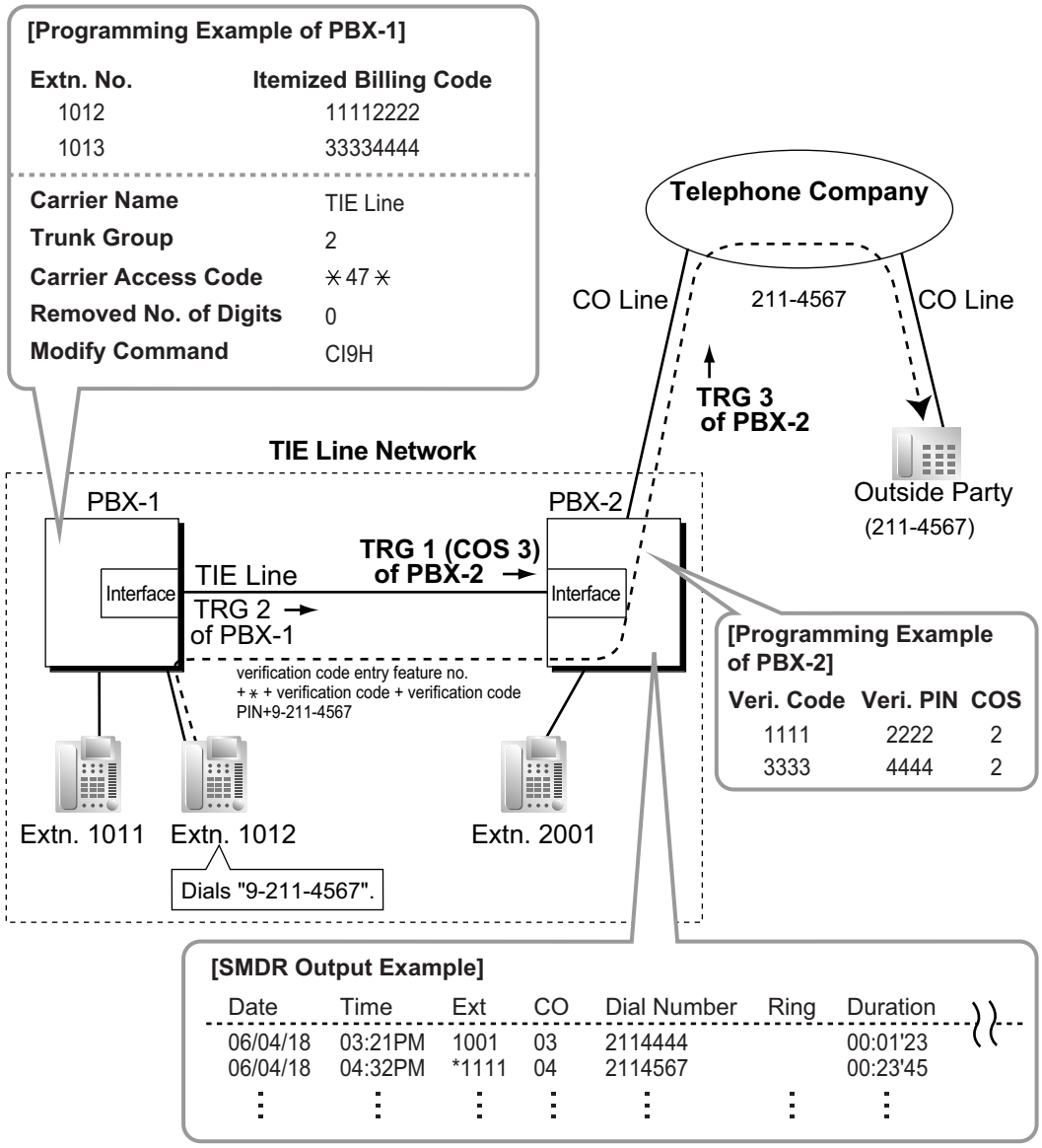

Explanation:

1. Extension 1012 of PBX-1 dials the Idle Line Access number of PBX-1 "9", and the telephone number "211-4567".
2. PBX-1 modifies the call (adds the verification code entry feature number, verification code and verification code PIN, and the Idle Line Access number of PBX-2 "9") and sends the call to PBX-2 through the TIE line (trunk group [TRG] 2) according to the ARS programming of PBX-1.

<PBX Code Method (Access with PBX Code)>

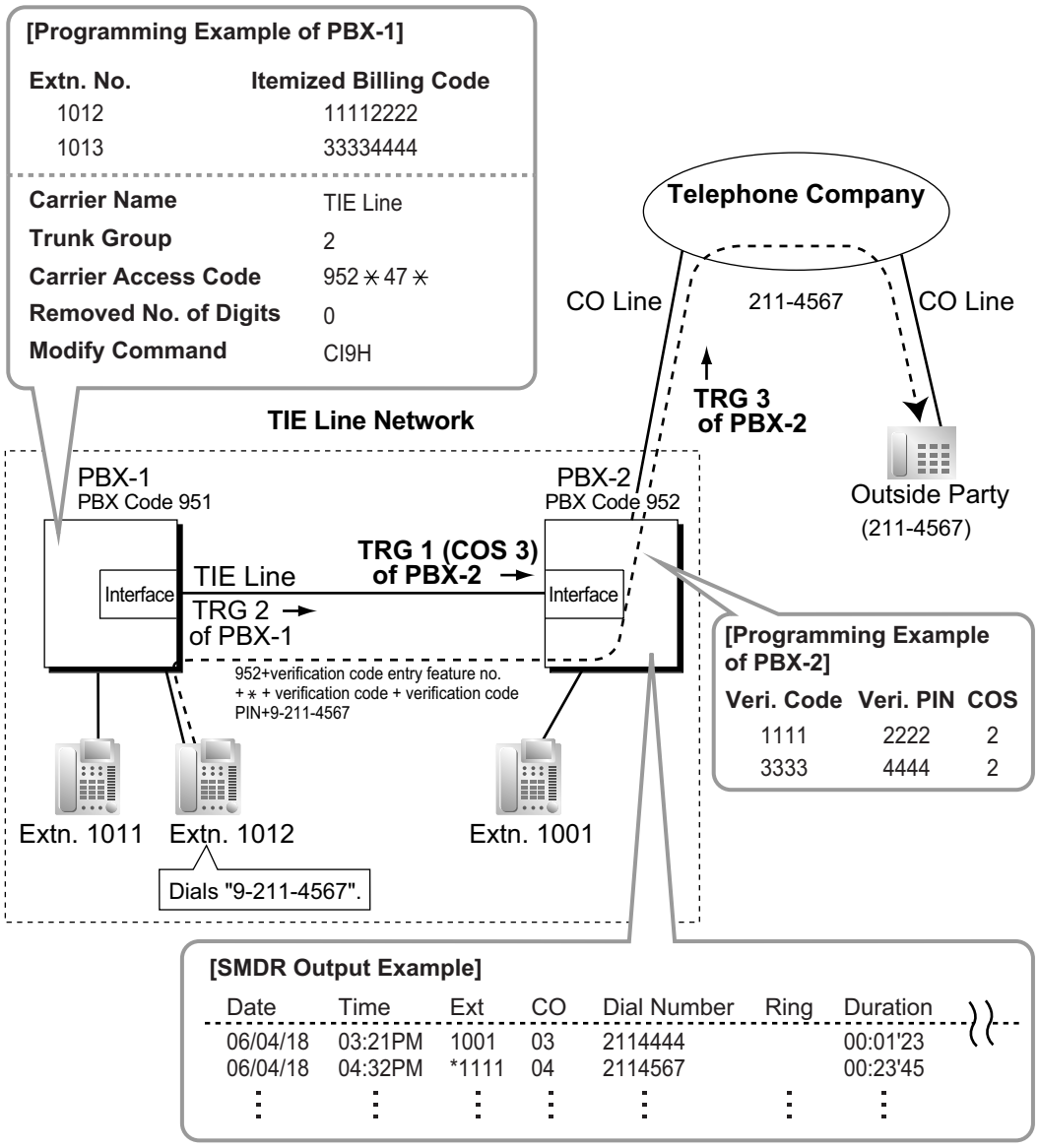

Explanation:

1. Extension 1012 of PBX-1 dials the Idle Line Access number of PBX-1 "9", and telephone number "211-4567".
2. PBX-1 modifies the call (adds "952", the verification code entry feature number, verification code and verification code PIN, and the Idle Line Access number of PBX-2 "9") and sends the call to PBX-2 which has PBX code "952" through the TIE line (trunk group [TRG] 2) according to the ARS programming of PBX-1.

d. FWD/Call Transfer/Intercept Routing to the CO Line

[Example]

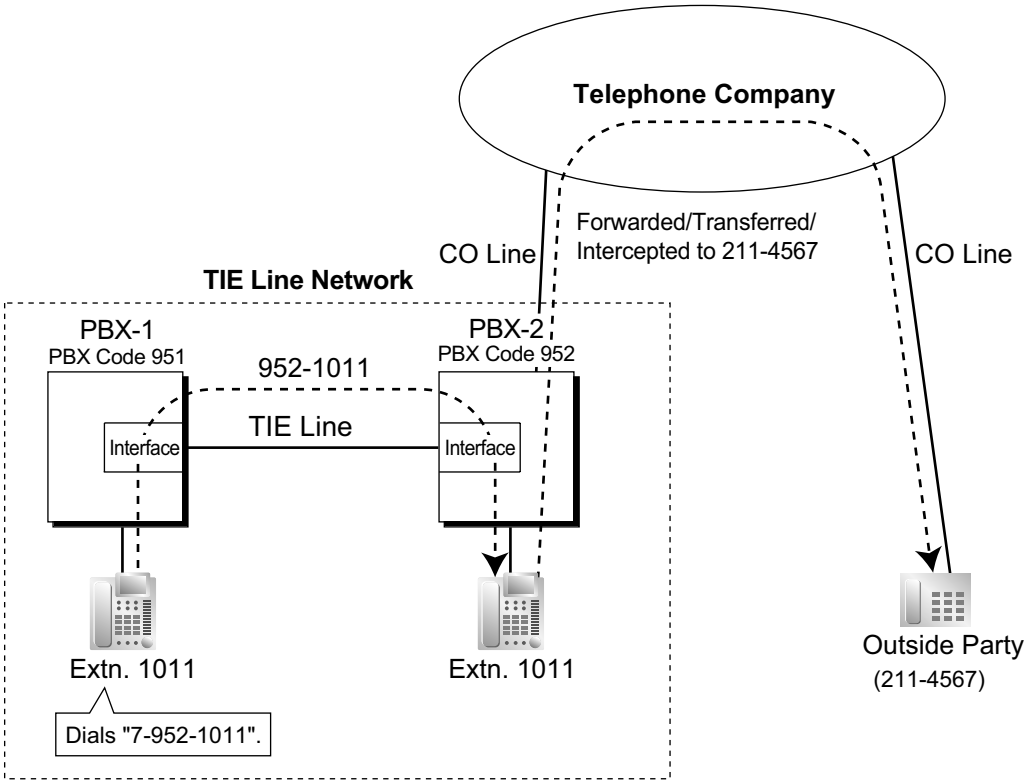

Explanation:

1. Extension 1011 of PBX-1 dials the TIE line access number "7", PBX code "952", and extension number "1011".
2. The call reaches the destination (extension 1011 of PBX-2) through the TIE line, and the call is forwarded, transferred or intercepted to the outside party "211-4567" through the CO line.

CO Line-to-TIE-to-CO Line Access

An outside caller can be connected to an outside party through the TIE line by using the DISA feature.
[Example]

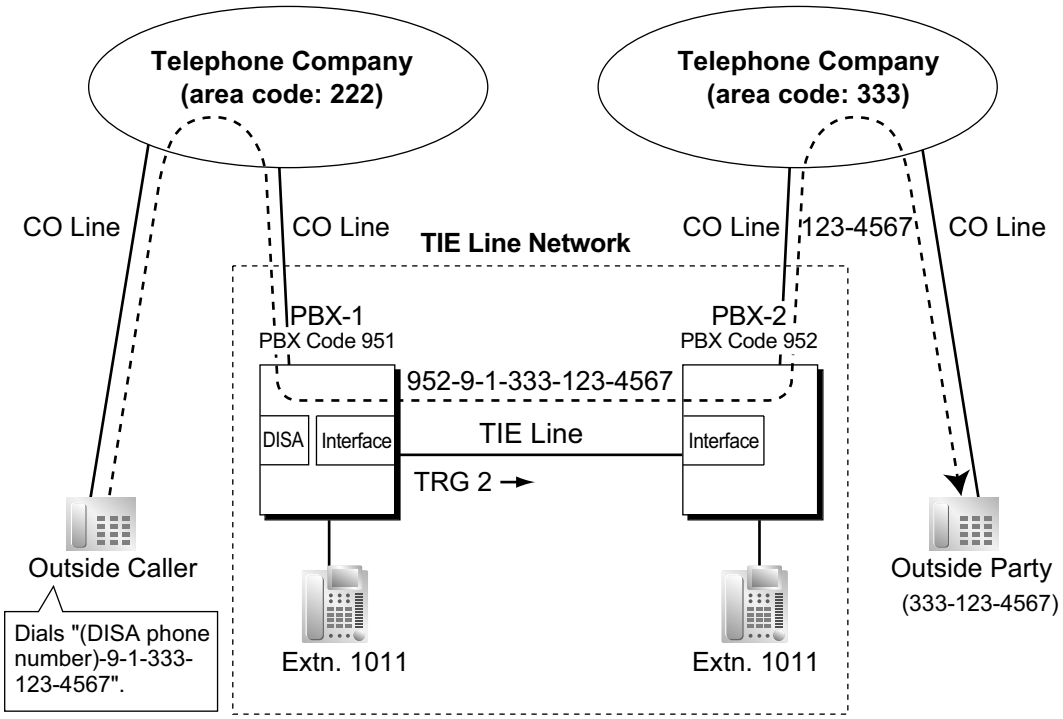

Explanation:

1. The outside caller dials the "DISA phone number of PBX-1", Idle Line Access number of PBX-1 "9", and telephone number "1-333-123-4567".
2. PBX-1 modifies the call (adds "952" and the Idle Line Access number of PBX-2 "9") and sends the call to PBX-2 which has PBX code "952" through the TIE line (trunk group [TRG] 2) according to the ARS programming of PBX-1.
3. PBX-2 sends the modified call to the outside party "333-123-4567" according to its ARS programming.

TIE Line Programming

To Make a TIE Line Call

The TIE Line Routing and Modification Table is referenced by the PBX to identify the CO line route when an extension user makes a TIE line call.
It is necessary to make unified tables with all PBXs in the TIE line network.
The routing pattern appropriate for each call is decided by the dialed number.
There are two system programs for the tables:
TIE Line Routing Table: used to assign the leading numbers (PBX code or extension number) and trunk group hunt sequence.
→ 11.1 [9-1] TIE Table—◆ Leading Number
TIE Modify Removed Number of Digits/Added Number: used to remove digits from and add a number to the dialed number of the TIE line call. This modification may be needed depending on the TIE line network configuration.
11.1 [9-1] TIE Table
→ ◆ Removed Number of Digits
→ ◆ Added Number
→ ◆ Trunk Group

[Programming Examples]
Your PBX is PBX-1 and there are four PBXs in your TIE line network. To identify the CO line route as illustrated, you should make the following tables.

a. Extension Number Method (Access without PBX Code)
4.9 [2-6-1] Numbering Plan—Main—Other PBX Extension—◆ Dial

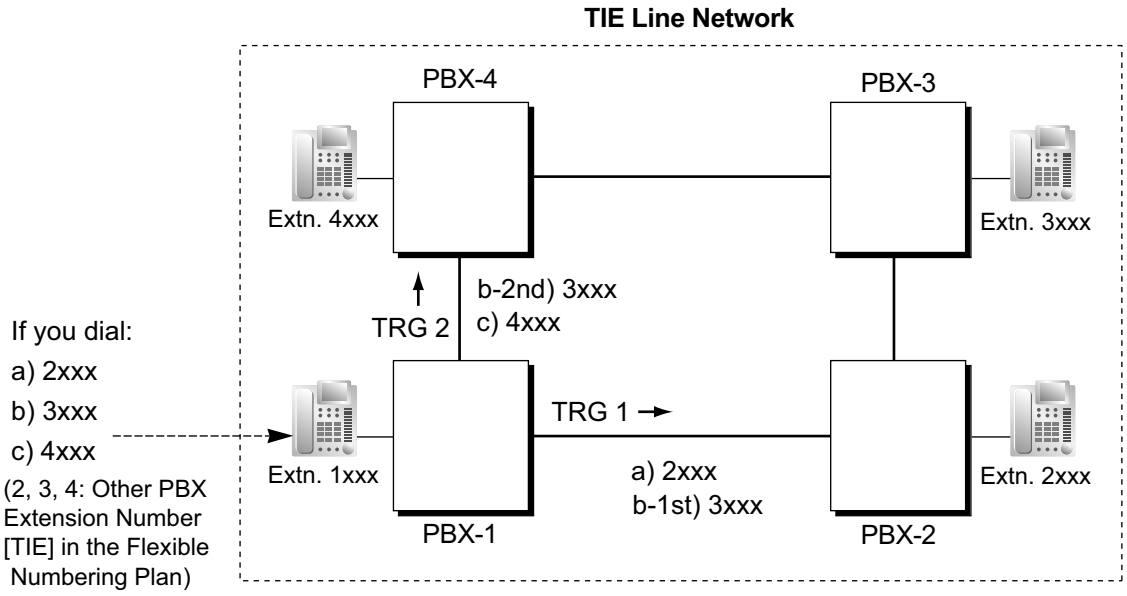

[TIE Line Routing and Modification Table of PBX-1]

Location No.	Leading No.	Priority 1			Priority 2			. .
		TRG	Dial Modification		TRG	Dial Modification		. .
			Removed No. of Digits	Added No.		Removed No. of Digits	Added No.	. .
01	2	1	0					. .
02	3	1	0		2	0		. .
03	4	2	0					. .
:	:	:	:	:	:	:	:	:

Explanation:

Location 01:
The hunt sequence by dialing [2XXX]:
The 1st route—trunk group (TRG) 1 ➡ Sending no. to PBX-2: 2XXX
Location 02:
The hunt sequence by dialing [3XXX]:
The 1st route—trunk group (TRG) 1 ➡ Sending no. to PBX-2: 3XXX
The 2nd route—trunk group (TRG) 2 ➡ Sending no. to PBX-4: 3XXX
Location 03:
The hunt sequence by dialing [4XXX]:
The 1st route—trunk group (TRG) 2 ➡ Sending no. to PBX-4: 4XXX

b. PBX Code Method (Access with PBX Code)

→ 4.9 [2-6-1] Numbering Plan—Main—Features—◆ TIE Line Access
→ 11.1 [9-1] TIE Table—◆ Own PBX Code

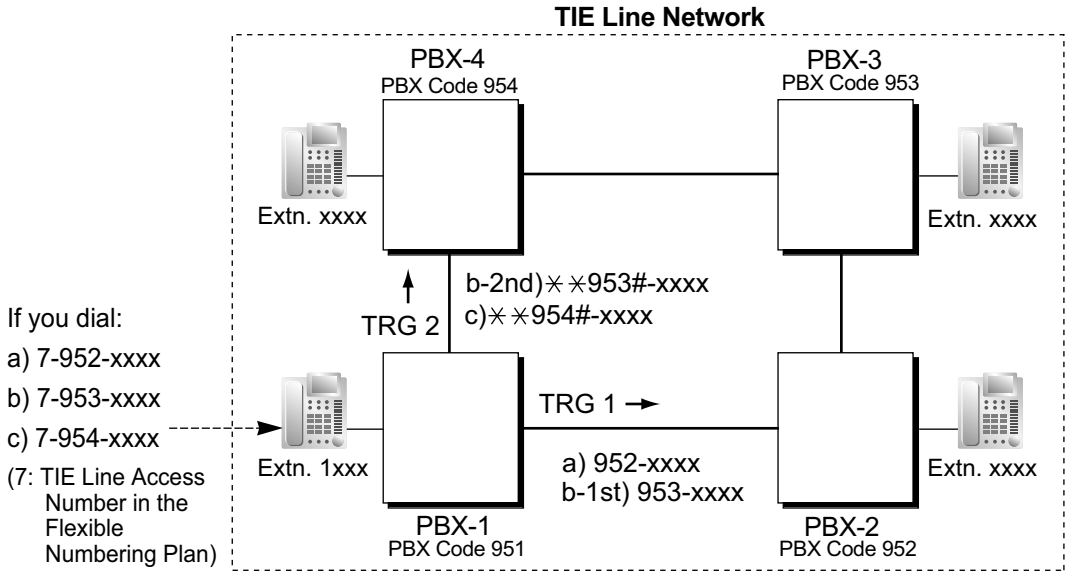

[TIE Line Routing and Modification Table of PBX-1]

Location No.	Leading No.	Priority 1			Priority 2			. .
		TRG	Dial Modification		TRG	Dial Modification		. .
			Removed No. of Digits	Added No.		Removed No. of Digits	Added No.	. .
01	952	1	0					. .
02	953	1	0		2	3	＊＊953#	. .
03	954	2	3	＊＊954#				. .
:	:	:	:	:	:	:	:	:

Explanation:

Location 01:
The hunt sequence by dialing [7+PBX Code 952+XXXX]:
The 1st route — trunk group (TRG) 1
➡ Sending no. to PBX-2: 952–XXXX
Location 02:
The hunt sequence by dialing [7+PBX Code 953+XXXX]:
The 1st route — trunk group (TRG) 1
➡ Sending no. to PBX-2: 953–XXXX
The 2nd route — trunk group (TRG) 2
➡ Sending no. to PBX-4: ＊＊953#–XXXX
Location 03:
The hunt sequence by dialing [7+PBX Code 954+XXXX]:
The 1st route — trunk group (TRG) 2
➡ Sending no. to PBX-4: ＊＊954#–XXXX

To Receive a TIE Line Call

a. Extension Number Method (Access without PBX Code)

[Example]

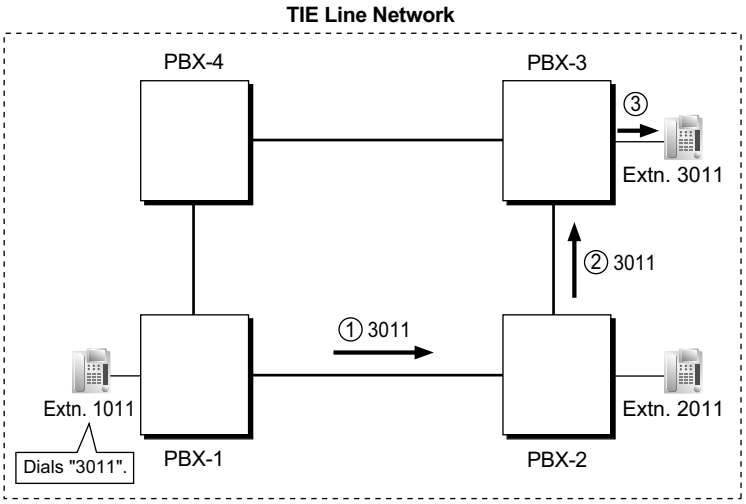

① A TIE line call is sent to PBX-2 from PBX-1. If the number sent from PBX-1 is an extension number of PBX-2 (e.g., 2011), the call will be received at extension "2011". If not, PBX-2 checks the number in the TIE Line Routing and Modified Table of PBX-2.

② If the match is found in the table, the call will be modified according to the table and send to the corresponding PBX (PBX-3).

③ The number sent from PBX-2 "3011" is an extension number of PBX-3. The call is received at extension "3011".

Note

When a TIE line call is sent from one PBX to another, the receiving PBX first modifies the received number according to the assignment for the CO line port: the number of digits removed, and the number added, are determined by this assignment. Then the PBX checks whether the completed number is an existing extension number at that PBX.

b. PBX Code Method (Access with PBX Code)

[Example]

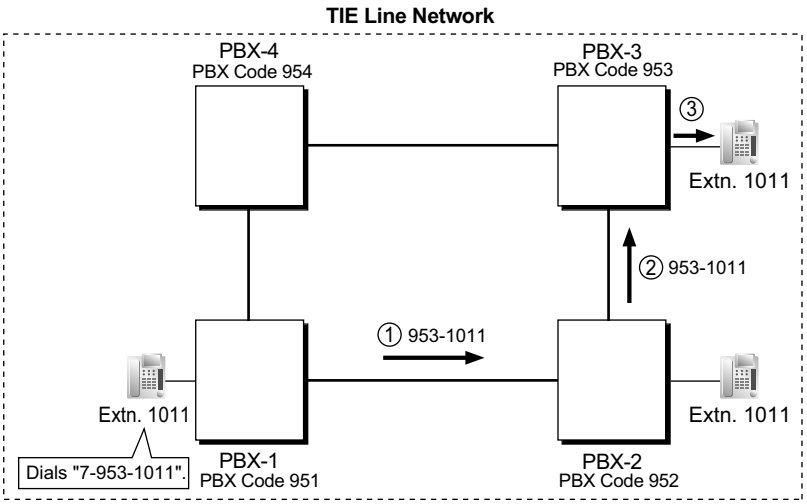

① A TIE line call is sent to PBX-2 from PBX-1. If the number sent from PBX-1 has the PBX code of PBX-2 "952", the call will be received at the corresponding extension of PBX-2 (e.g., 1011 of PBX-2). If not, PBX-2 checks the number in the TIE Line Routing and Modified Table of PBX-2.

② If the match is found in the table, the call will be modified according to the table and send to the corresponding PBX (PBX-3).

③ The number sent from PBX-2 "953-1011" has the PBX code of PBX-3 "953". The call is received at extension "1011" of PBX-3.

Note

When a TIE line call is sent to a PBX from another PBX, first the PBX modifies the number sent to the PBX according to the assignment for each CO line port of the PBX: the removed number of digits from and/or added number to the number sent to the PBX is determined by the assignment. Then the PBX starts to check the number whether the number has the PBX code of the PBX.

TIE Line Routing Flowchart

[Making a TIE Line Call from an Extension]

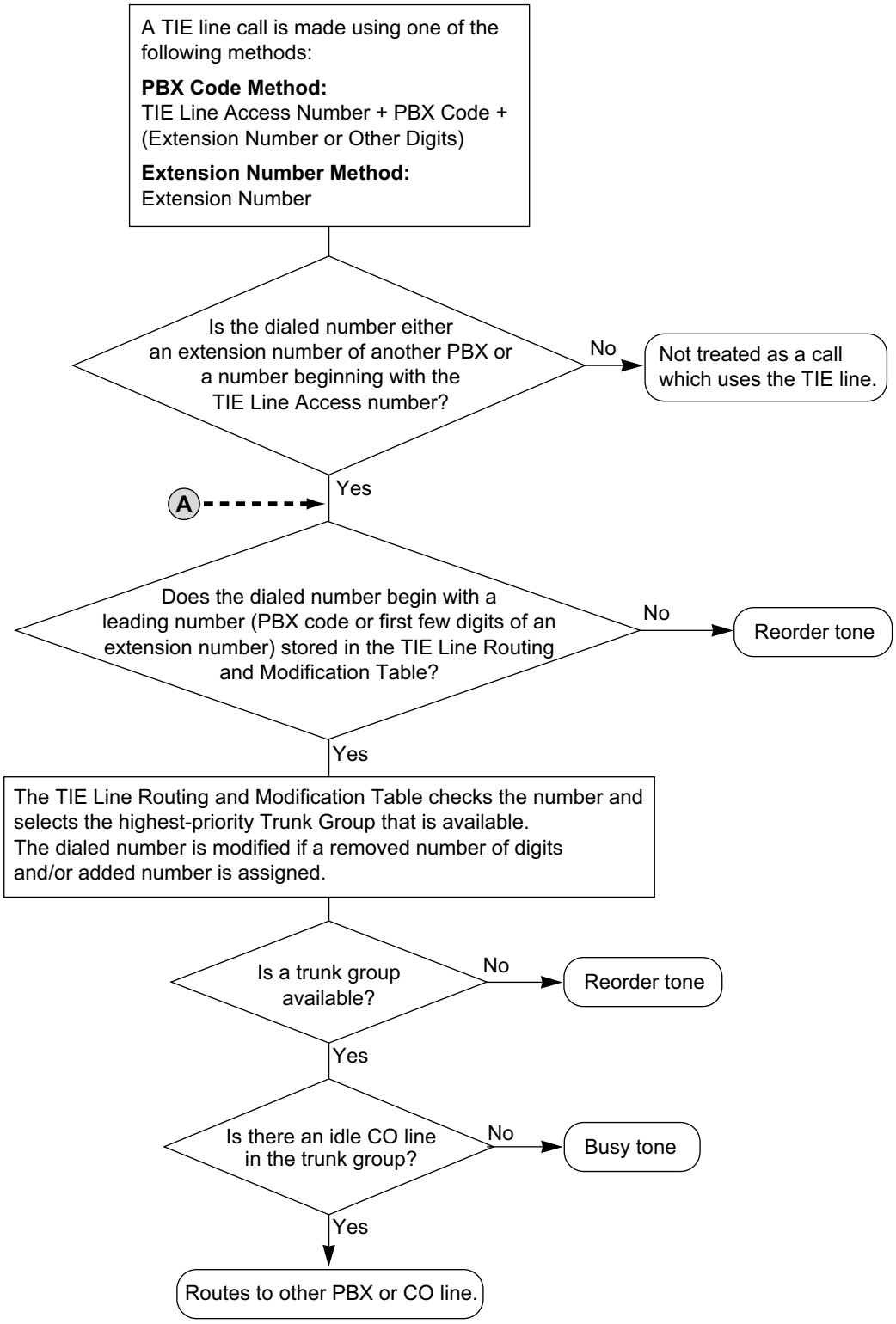

[Receiving a Call through a TIE Line]

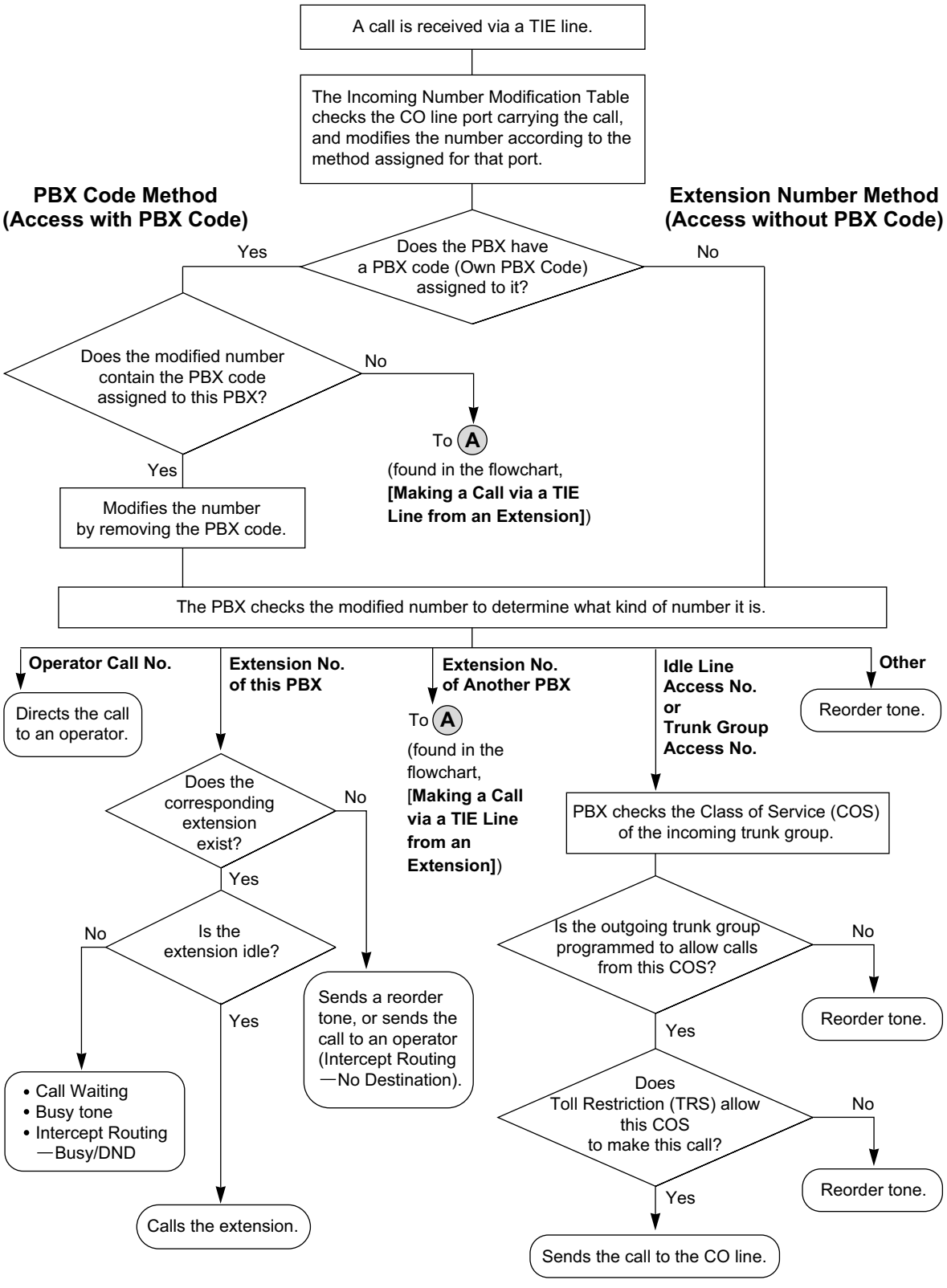

Common Extension Numbering for 2 PBXs

Two PBXs can have extensions with the same leading number. TIE Line calling is available using extension numbering.

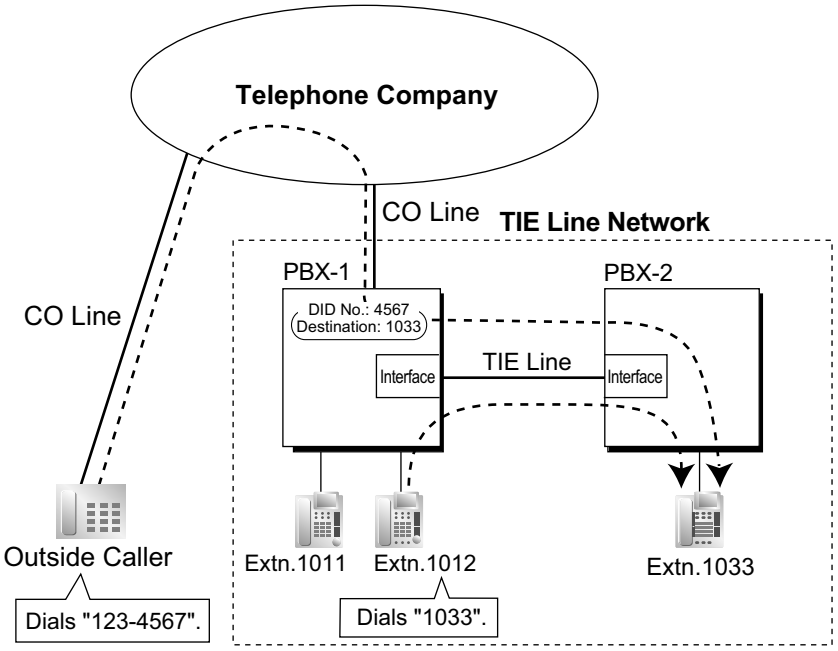

Explanation:

The PBX first searches local extensions for a matching number. If a dialed number is not found at the local PBX, the call can then be sent to a remote PBX, and the remote PBX checks the TIE Line Routing Table for a corresponding entry.

Case 1:

Extension 1012 of PBX-1 dials extension number "1011".
→ The dialed number is found at the local PBX, and extension 1012 of PBX-1 is connected to extension 1011 of PBX-1.

Case 2:

Extension 1012 of PBX-1 dials extension number "1033".
→ The dialed number is not found at the local PBX, so the call is redirected to the specified TIE Line, and extension 1012 of PBX-1 is connected to extension 1033 of PBX-2.

Case 3:

A public CO line call directed to extension 1033 arrives at PBX-1.
→ The target extension number is not found at the local PBX, so the call is redirected to the specified TIE Line, and the call is connected to extension 1033 of PBX-2.

- The KX-NCS3910, KX-NCS4910 or KX-NCS4950 (Activation Key for Software Upgrade to Enhanced Version) is required to use this feature.
- System programming is required to enable this feature.
- If a dialed number is not found at a remote PBX, the call cannot be redirected to the local PBX to search for a matching number.

Conditions

- A CO line which is used for a private network should be assigned "**Private**" as the networking type. (→ 9.1.10 INCOMING CALL FEATURES)
- To establish a QSIG network (→ 13.1.20 PRIVATE NETWORK FEATURES—QSIG), each ISDN (QSIG) connection in a TIE line network must have the port on one PBX assigned as a master port, and the port on the other PBX assigned as a slave port. PBXs that support this feature are KX-NCP series, KX-TDE series, and KX-TDA series PBXs.

[TIE Line Network Connection Example]

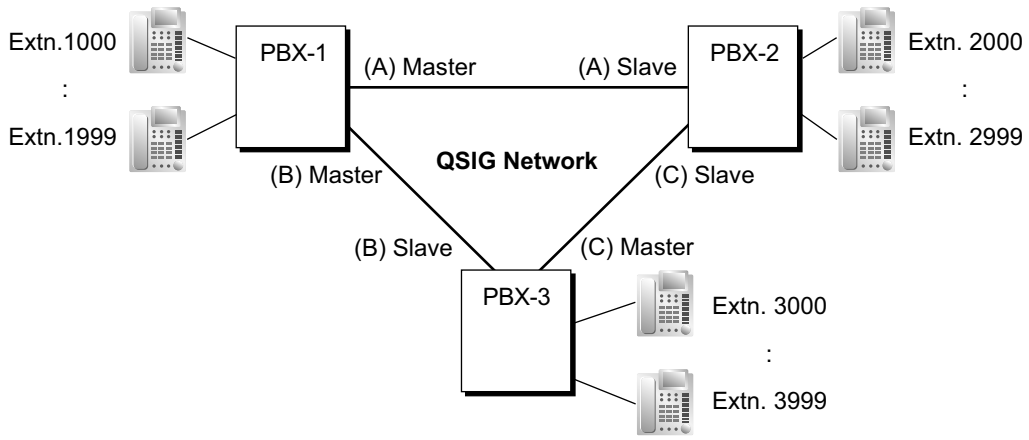

- When a TIE line call arrives at a busy extension which has disabled Call Waiting, the caller will hear a busy tone. If required, Intercept Routing can be activated.
- The Inter-digit time can be assigned for TIE line calls.
  → 4.5 [2-3] Timers & Counters—Miscellaneous—◆ Incoming Call Inter-digit Timer—DID

PC Programming Manual References

3.11 [1-1] Slot—Shelf Property - Virtual IP Gateway—GW Settings
3.12 [1-1] Slot—Shelf Property - Virtual IP Gateway—DN2IP
3.33 [1-1] Slot—Port Property - PRI Port—Network Numbering Plan—◆ Trunk Property
3.36 [1-1] Slot—Port Property - T1 Port—◆ Trunk Property
4.5 [2-3] Timers & Counters—Miscellaneous—◆ Incoming Call Inter-digit Timer—DID
4.9 [2-6-1] Numbering Plan—Main—Features
→◆ Idle Line Access (Local Access)
→◆ Trunk Group Access
→◆ TIE Line Access
4.9 [2-6-1] Numbering Plan—Main—Other PBX Extension
4.12 [2-7-1] Class of Service—COS Settings—TRS—◆ TRS Level—Day, Lunch, Break, Night
4.18 [2-9] System Options—Option 4—◆ Private Network—TIE Call by Extension Numbering (Activation Key Required)
5.1 [3-1-1] Trunk Group—TRG Settings—Main—◆ COS
11.1 [9-1] TIE Table
12.2 [10-2] DIL Table & Port Settings
→DIL—◆ Trunk Property
→DIL—◆ DIL Destination—Day, Lunch, Break, Night
→DID/TIE
12.3 [10-3] DID Table—◆ DID Destination—Day, Lunch, Break, Night
12.6 [10-4] Miscellaneous—◆ Intercept—Routing to Operator - No Destination (Destination is not programmed.)

PT Programming Manual References

[453] DID Destination
[500] Trunk Group Number

Feature Manual References

1.1.3 ARS (Automatic Route Selection)
3.1.11 Call Transfer
4.1.8 DISA (Direct Inward System Access)
6.1.4 Flexible Numbering/Fixed Numbering
6.1.6 FWD (Call Forwarding)
9.1.11 Intercept Routing
17.1.6 TRS (Toll Restriction)
21.1 Capacity of System Resources

Operating Manual References

1.2.1 Making Calls

13.1.16 Private Network Features—Centralized Voice Mail

Description

Up to 8 PBXs connected in a VoIP or ISDN private network can share the services of a VPS connected to another PBX in DPT integration. This VPS can provide voice mail for extensions attached to any of the PBXs in the network, as if the VPS were connected to the local PBX. In addition, the VPS can send Message Waiting notifications to extensions at any PBX, and users can access their mailboxes directly using the Message Waiting button.
The VPS features available at extensions in a network are shown below.

No.	Feature	Remote VPS	Local VPS
1	Automatic Configuration—Quick Setup	No	Yes
2	FWD to a Mailbox of the VPS	Yes	Yes
3	Intercept Routing to a Mailbox of the VPS	Yes	Yes
4	Voice Mail (VM) Transfer Button	Yes*1	Yes
5	Transfer Recall to a Mailbox of the VPS	No	Yes
6	Listening to a Recorded Message (Direct Mailbox Access)	Yes	Yes
7	VPS CO Line Service & Automatic Time Mode Notification	Yes	Yes
8	Caller's Identification Notification to the VPS	Yes	Yes
9	DID Number Notification to the VPS	Yes	Yes
10	Status Notification to the VPS	Yes	Yes
11	Paging by the VPS	No	Yes
12	Live Call Screening (LCS)	No	Yes

No.	Feature	Remote VPS	Local VPS
13	Two-way Recording into the VPS	No	Yes
14	VPS Data Control by the PBX	Yes	Yes
15	Remote FWD Setting by the VM	No	Yes
16	VM Menu	No	Yes
17	Message clear on Check Out	No	Yes
18	Voice message number display	Yes	Yes

*1 Available only if the remote VPS's PBX is also a KX-NCP series/KX-TDE series PBX with MPR Software Version 4.1000 or later.

[CO Line Call Answered by the VPS, Transferred to Extension at Other PBX (Extension Number Method)]

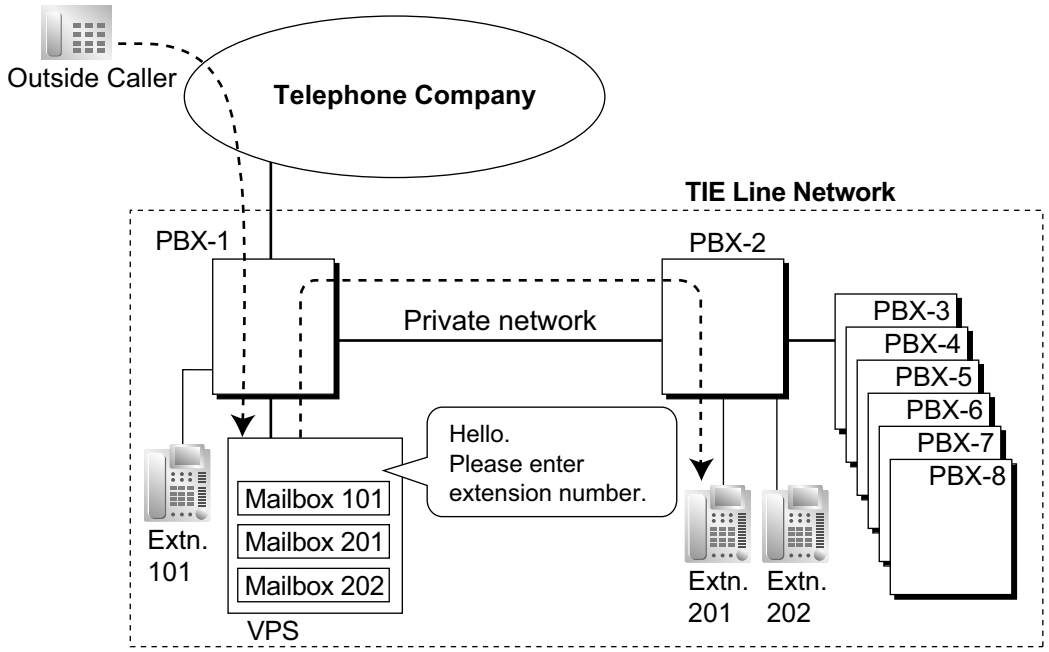

[Explanation]

A CO line call is answered by the AA service of the VPS. The caller enters extension number 201, so the call is transferred over the private network to extension 201.
If extension 201 does not answer, mailbox 201 in the VPS will answer it and play the appropriate message.

[CO Line Call to an Extension Not Answered, Forwarded to Mailbox (Extension Number Method)]

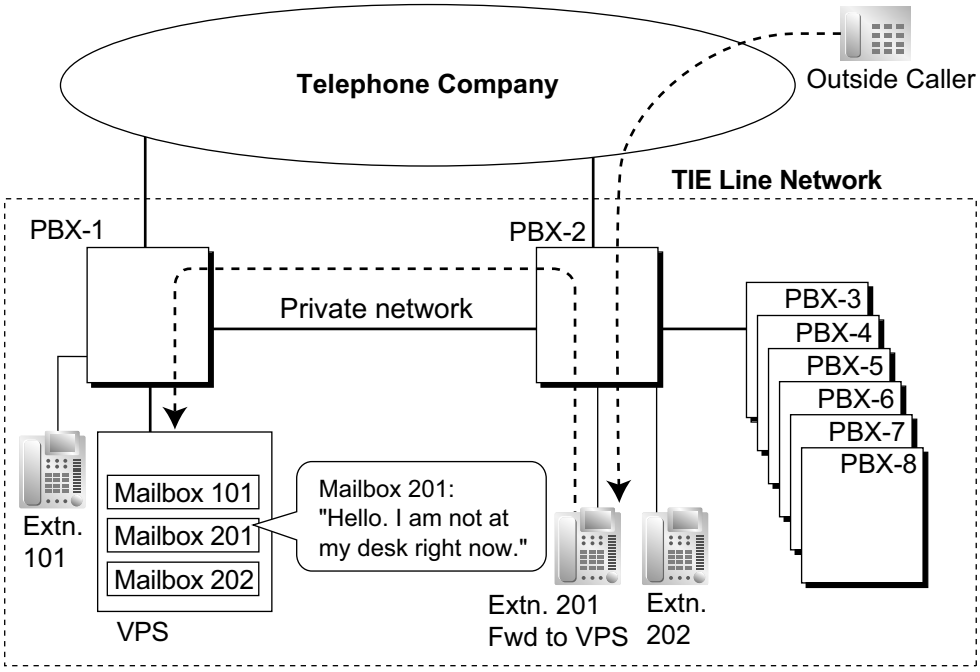

[Explanation]

Extension 201 does not answer the CO line call, so the call is forwarded to the VPS, and answered by mailbox 201. If the outside caller leaves a message, the VPS sends a Message Waiting notification to the extension using Enhanced QSIG information over the private network.
When forwarding the call, PBX-2 sends any received call information (Caller ID number/name, etc.) along with the VM trunk group number to use, applicable time mode, and extension number and forwarding reason of the original destination extension to PBX-1 as Enhanced QSIG information.

PBX Code Method

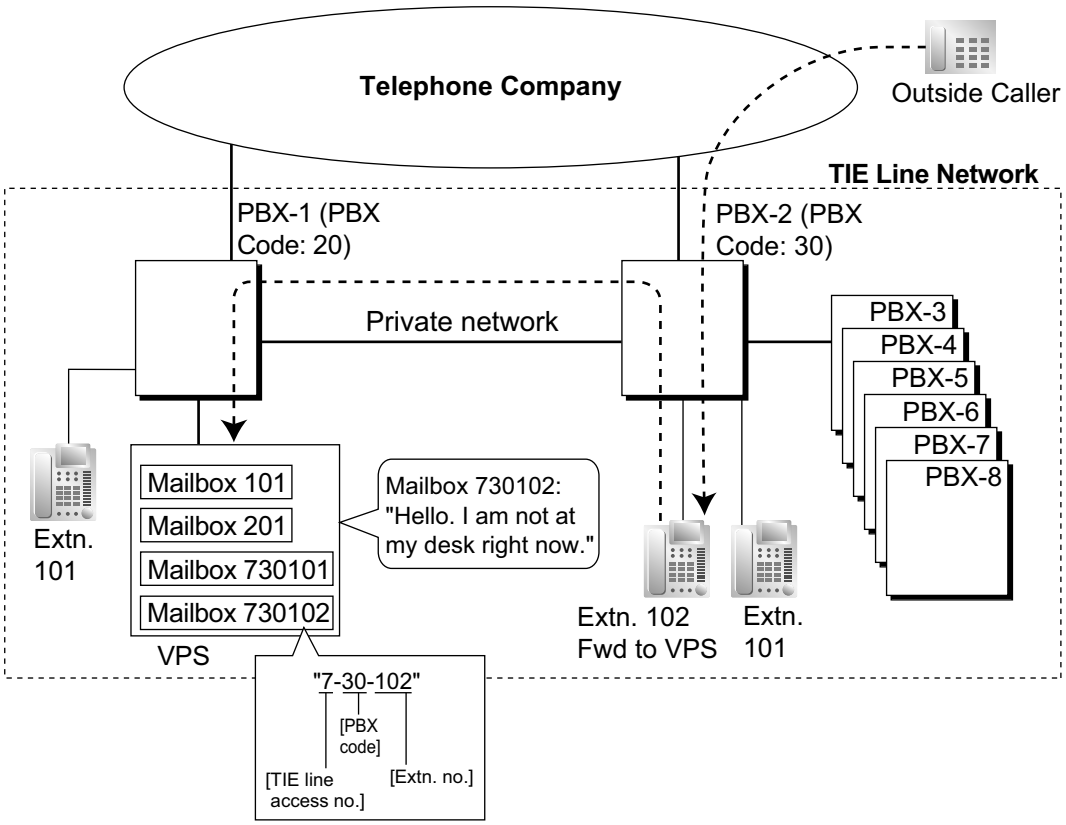

[Explanation]

Extension 102 does not answer the CO line call, so the call is forwarded to the VPS, using a VPS mailbox number containing the **TIE line access number**, the **PBX code** of the PBX that received the call, and the **extension number** that received the call.
This mailbox number is the same as if an extension connected to PBX-1 called extension 102 of PBX-2. This mailbox number should be programmed as the mailbox number and owner extension number on the VPS.

Multiple VPSs

More than one PBX in the network can have a VPS connected, and each VPS can provide voice mail services for extensions connected to other PBXs in the network.

Conditions

[General]

- The KX-NCS3910, KX-NCS4910 or KX-NCS4950 (Activation Key for Software Upgrade to Enhanced Version) is required for the KX-NCP series/KX-TDE series PBX connected to the VPS, and for all KX-NCP series/KX-TDE series PBXs that will use this feature.
- All PBXs in the network must be KX-NCP series, KX-TDE series, or KX-TDA series PBXs. For information on the hardware requirements for KX-TDA series PBXs that share the same VPS, refer to the corresponding Feature Manual.
- Only KX-TVA series VPSs connected using DPT integration support this feature.
- An extension can receive Message Waiting notifications from multiple VPSs connected to PBXs in the network. When multiple notifications of the number of unheard messages in an extension user's message box are sent from different VPSs, the most recent notification will be displayed.

- A flexible button cannot be customized as a Message Waiting button for another extension at a different PBX.
- Whether or not Enhanced QSIG information is transmitted can be set in the TIE table.
- When PBXs are connected by PRI23 cards, the card must be set to ISDN Standard mode. If set to T1 mode, the card must be removed and reinstalled to allow the mode to be changed. When the card is reinserted into the PBX, it is possible to choose whether the card will be set to T1 mode or ISDN Standard mode. The default is ISDN Standard.
- **PBX Code Method**
  The number used in this method must be no more than 8 digits.
- When using a mailbox number containing more than 5 digits, the version of the KX-TVA series VPS must be 2.1 (Main Software Version 2.50) or later.
- The VM Menu feature cannot be used in a Centralized Voice Mail network. When extensions belonging to a PBX that is not connected to the VPS have a mailbox in the VPS, the VM Menu feature should be disabled for the mailbox using the Class of Service (COS) setting of the VPS. Otherwise, there may be an answering delay of about 6 seconds.
- To use Centralized Voice Mail over an IP network, the network should consist of only V-IPGW cards or only IP-GW cards.

[Voice Mail (VM) Transfer Button]

- A flexible button can be customized as the VM Transfer button with the floating extension number of the VM group of a remote VPS as the parameter.
- A call in progress can be transferred to a VPS mailbox by pressing the VM Transfer button and then (1) pressing a DSS button or NDSS button, or (2) dialing the desired extension number directly. When the desired extension number (or TIE Line Access number + PBX code + desired extension number) is dialed directly, it must be followed by "#" in these cases:
  – The extension user performing the transfer and the destination extension belong to different PBXs.
  – The PBX of the extension user pressing the VM Transfer button does not have its own VPS.
- VM Transfer button functions will not operate on networks using Common Extension Numbering for 2 PBXs, or Common Extension Numbering for Multiple PBXs. It is necessary to create a network where the Voice Mail can be accessed by the TIE Line Access number or an Other PBX Extension number.

Example: Using Centralized Voice Mail with Common Extension Numbering

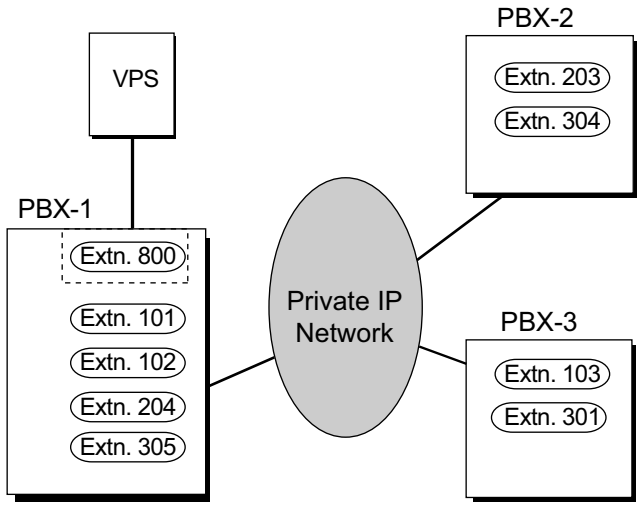

[Explanation]

In this example, only PBX-1 has an extension beginning with "8" assigned (for the VPS). In the Flexible Numbering Plan for PBX-2 and PBX-3, "1", "2", and "3" must be set as "Extension Numbers", and "8" must be set as an "Other PBX Extension Number (TIE)".

PC Programming Manual References

3.48 [1-3] Option—◆ New Card Installation—ISDN Standard Mode for PRI23 Card
5.19 [3-7-2] VM(DPT) Group—Unit Settings—Centralized VM Unit Setting
11.1 [9-1] TIE Table—Enhanced QSIG
11.2 [9-2] Network Data Transmission
→◆ Network MSW Data Transmission for Centralized VM Feature—Data Re-transmission : Repeat Counter
→◆ Network MSW Data Transmission for Centralized VM Feature—Data Re-transmission : Repeat Timer
13.1 [11-1] Main—Maintenance
→◆ Error Log for Centralized VM—Network MSW Transmission (Counter)
→◆ Error Log for Centralized VM—Network MSW Transmission (Buffer)

Feature Manual References

13.1.15 PRIVATE NETWORK FEATURES
19.1.4 Voice Mail DPT (Digital) Integration

13.1.17 Private Network Features—NDSS (Network Direct Station Selection)

Description

When PBXs are networked using ISDN or V-IPGW/IP-GW cards, it is possible to assign flexible buttons as Network Direct Station Selection (NDSS) buttons. These buttons are used to monitor the status of extensions connected to up to seven other PBXs in the network, and to make or transfer calls to those extensions with one touch, like normal DSS buttons. This allows operator functions to be centralized even when there are offices in remote locations.
NDSS buttons show the status of the monitored extension as follows:

Light pattern	Status
Off	The monitored extension is idle.
Red on	The monitored extension is busy or has set DND for CO line calls.

[Example Network]

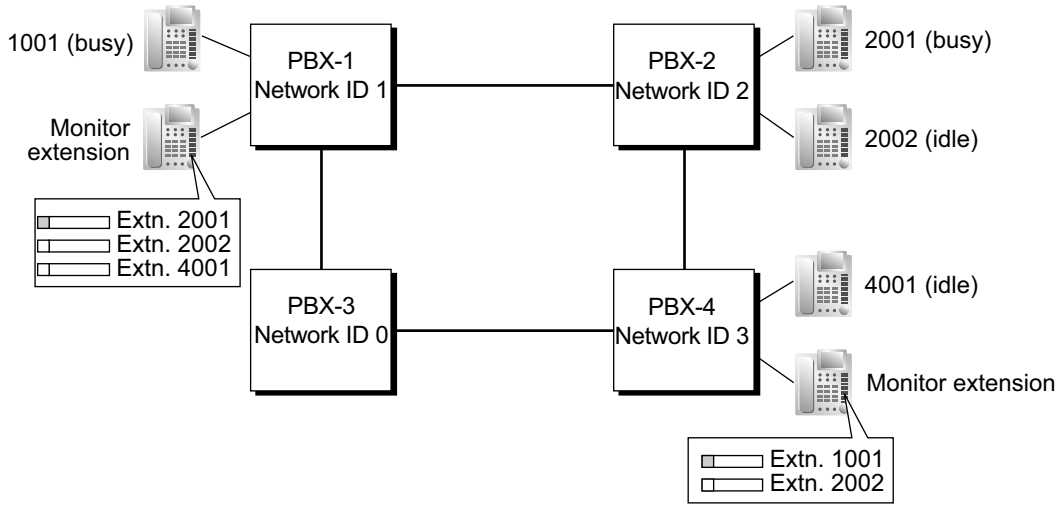

[Programming Procedure]

1. **Routing Table Assignment**
   TIE Line Routing and Modification tables must have been programmed in advance for all PBXs in the network, to allow calls to be made and transferred between PBXs (→ 13.1.15 PRIVATE NETWORK FEATURES).
   In the programming example that follows, the PBXs in the network use the Extension Number method, as shown in the illustration above. However, the PBX Access Code method can also be used.
2. **Network PBX ID Assignment**
   Assign a Network PBX ID to each PBX in the network.
   → 11.2 [9-2] Network Data Transmission—◆ Network Data Transmission for Centralized Operator Feature—Network PBX ID
   - IDs 1-8: Can monitor extensions at other PBXs, and transmit monitor data about local extensions. Each ID number can be assigned to one PBX within the network.
   - ID 0: Retransmits monitor data throughout the network. This ID number can be assigned to multiple PBXs.
3. **QSIG Port Setting [Monitored PBX]**

ISDN-QSIG (PBX Direct Connection)

Each QSIG port of a PRI card that will be used to transmit extension status information must be set to do so through system programming. Even if a port is set to not transmit information, it will still receive information from other PBXs.
3.33 [1-1] Slot—Port Property - PRI Port—CO Setting—◆ Networking Data Transfer

Transmit	Extension Status Information Functions
Enabled	• Transmit information on own PBX extensions • Receive information from other PBXs; forward it to other QSIG ports of the PBX • Re-transmit information received by other QSIG ports of the PBX
Disabled	• Receive information from other PBXs; forward it to other QSIG ports of the PBX

Set the transmission setting for each port according to the layout of your network, so that extension status information can travel between NDSS monitor PBXs.

[Example ISDN Network Port Setting]

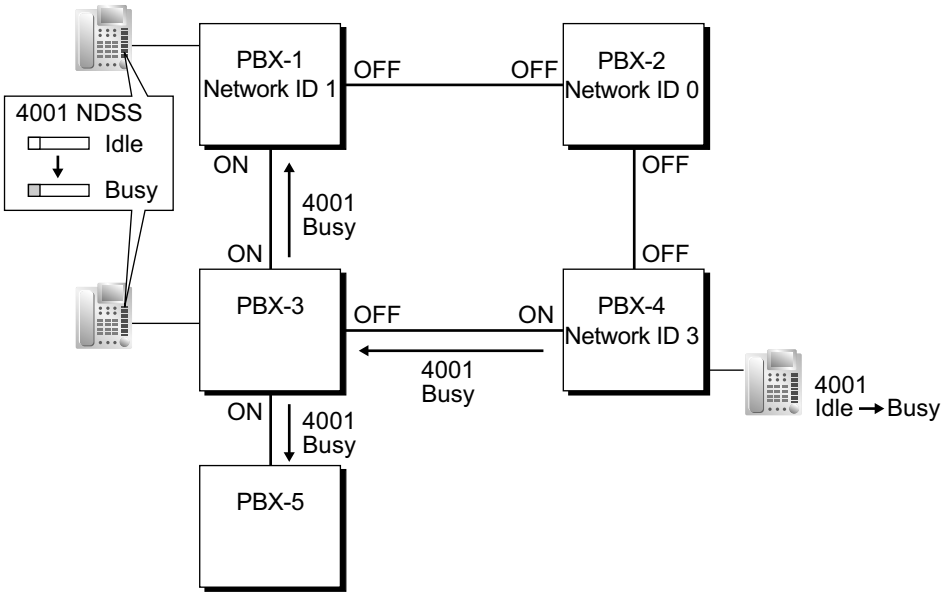

IP-Gateway-QSIG

IP data is routed through the network according to the routing tables of the V-IPGW/IP-GW cards. When using VoIP, it is necessary to identify the monitor PBXs, to which to transmit extension status information, for each card that will be used. This is done by specifying the extension number of any extension (for example, the PBX operator) at the monitor PBX as a Network Operator extension for that V-IPGW/IP-GW card.

[Example VoIP Network]

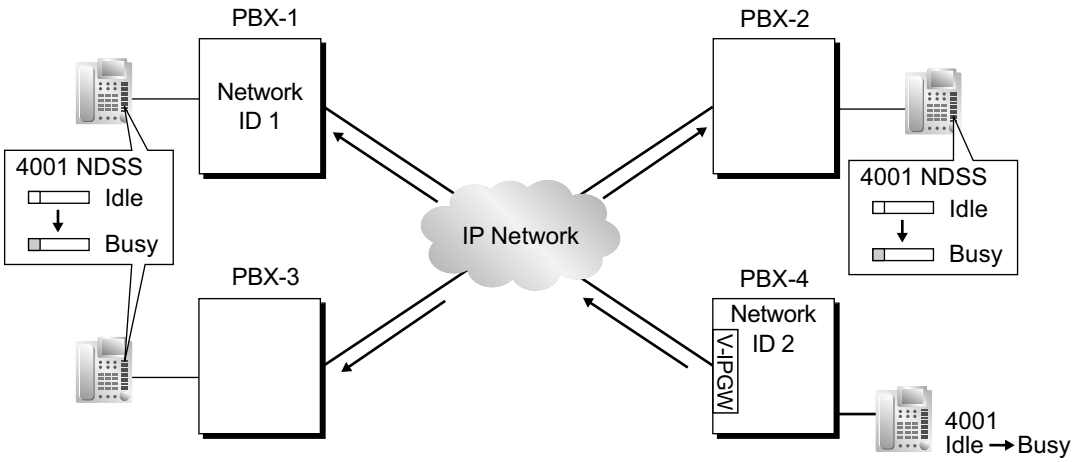

Mixed Network

When using the NDSS feature over a mixed network containing both VoIP portions and ISDN line portions, it is possible to set whether status information will be transferred between VoIP and ISDN cards within each PBX. For example, if the monitor PBX is on a VoIP network, and monitored PBXs are on an ISDN network, the PBX that acts as a gateway between the VoIP and ISDN networks must have this setting enabled for ISDN to VoIP.

4. **Network Monitor Extension Registration [Monitor PBX]**

Register the extensions (attached to other PBXs) that will be monitored. A maximum of 250 extensions can be registered. Only extensions that have been registered here can be assigned to NDSS buttons.
11.4 [9-4] NDSS Key Table—◆ Network Extension No.

Network Monitor Extensions Table

Index No.	Network Extn. No.	Network Extn. Name
001	2001	Branch 1: T. Jones
002	2002	Branch 1: M. Davidson
003	4001	Branch 2: R. Powell
:	:	:
250		

When using the PBX Access Code numbering method, the relevant access code must be added before the extension number registered here.

5. **NDSS Button Customization [Monitor PBX]**
At any extension attached to a monitor PBX, customize a flexible button as an NDSS button for an extension registered above. Then go off-hook, press this button once, and go on-hook again. This activates the monitoring function. The monitored PBX will begin to transmit information about the status of that extension, and the monitor PBX will begin to receive the information. The button light will display the status of the extension connected to another PBX.
Removing or Editing a Registered Extension [Monitor PBX]
To monitor a new extension when 250 extensions are already being monitored, it is necessary to remove the registration of an existing extension.
The NDSS Monitor Release feature is used to stop monitoring a certain extension. When this feature is performed at a monitor PBX:
   - If no other PBXs are monitoring the selected extension, the monitored PBX stops transmitting status information for that extension.
   - The monitor PBX stops receiving status information for the selected extension. All NDSS buttons for that extension stop displaying status information.

   However, the related information is not deleted from the Network Monitor Extensions Table. Therefore, if an extension user at a monitor PBX subsequently goes off-hook and presses the NDSS button for that extension, monitoring will be reactivated. To completely remove monitoring of an extension, the registration data must also be deleted from the Network Monitor Extensions Table at each monitor PBX.
   The monitor destination of each NDSS button is determined by the registration information for a particular index number in this table. Therefore, if the registration information for an index number is changed (for example, the Network Extension Number assigned to Index No. 001 in the example above is changed from "2001" to "4002"), any NDSS buttons that have been set for that extension will automatically point to the new monitor destination.

Conditions

- The KX-NCS3910, KX-NCS4910 or KX-NCS4950 (Activation Key for Software Upgrade to Enhanced Version) is required for all KX-NCP series/KX-TDE series PBXs that will monitor extensions or have extensions monitored.
- NDSS buttons will not function on networks using Common Extension Numbering for 2 PBXs, or Common Extension Numbering for Multiple PBXs.
- **Hardware Requirements (KX-TDE series only):**
  If using an IP-GW4E card (KX-TDA0484), the firmware (not LPR) of the card must be version 1.2 or later.
  If using a PRI23 card (KX-TDA0290), the LPR software of the card must be version 1.009 or later.

- All PBXs in the network must be KX-NCP series, KX-TDE series, or KX-TDA series PBXs. For information on the hardware requirements for KX-TDA series PBXs that will monitor extensions or have extensions monitored, refer to the corresponding Feature Manual.
- Each of Network PBX IDs 1-8 can only be assigned to one PBX within a network. Assigning the same Network PBX ID to two PBXs will cause network data transmission problems.
- It is only possible to assign NDSS buttons for extensions that have been previously registered in the Network Monitor Extensions Table.
  6.5 [4-1-4] Wired Extension—Flexible Button
  → ◆ Type
  → ◆ Dial (for NDSS)
  6.13 [4-2-3] Portable Station—Flexible Button
  → ◆ Type
  → ◆ Dial (for NDSS)
  6.18 [4-3] DSS Console
  → ◆ Type
  → ◆ Dial (for NDSS)
- Extensions connected to one PBX can monitor a maximum of 250 extensions at other PBXs. One extension can be monitored by multiple extensions at multiple PBXs.
- To reduce NDSS data traffic, it is recommended that 8 or less extensions in a single Incoming Call Distribution Group be monitored.
- Activation of an NDSS button is only required the first time that a button for a newly registered extension is created. Once an NDSS button has been activated by being pressed the first time, any further NDSS buttons for the same monitored extension will automatically display the extension status without needing to be activated.
- To use the NDSS Monitor Release feature, an extension must be assigned as a manager.
  4.12 [2-7-1] Class of Service—COS Settings—Manager—◆ Manager
  [511] Manager Assignment
- Through system programming, it is possible to assign a maximum number of "hops" (transfers between PBXs) that extension status information can travel. Each time a piece of extension status information is forwarded to another PBX, its counter is increased by one. When this counter reaches the assigned maximum, the data is discarded. This is used to prevent data from circling unnecessarily around the network.
  11.2 [9-2] Network Data Transmission—◆ Network Data Transmission for Centralized Operator Feature—Data Transmission Counter
- If it is not possible to remotely turn off transmission of extension status information using the NDSS Monitor Release feature because of network conditions, it is possible to perform the same operation directly through system programming at the monitored PBX.
  6.8 [4-1-6] Wired Extension—NDSS Link Data - Send
  6.15 [4-2-4] Portable Station—NDSS Link Data - Send
- When using a VoIP network, if extension status information is lost by the network, in some cases an NDSS button may not be able to display the status of the relevant extension.
- NDSS can not be used when two PBXs are networked using the **Common Extension Numbering for 2 PBXs** feature (→ 13.1.15 PRIVATE NETWORK FEATURES).

PC Programming Manual References

3.33 [1-1] Slot—Port Property - PRI Port—CO Setting—◆ Networking Data Transfer
4.12 [2-7-1] Class of Service—COS Settings—Manager—◆ Manager
6.5 [4-1-4] Wired Extension—Flexible Button
→◆ Type
→◆ Dial (for NDSS)
6.8 [4-1-6] Wired Extension—NDSS Link Data - Send
6.13 [4-2-3] Portable Station—Flexible Button

→◆ Type
→◆ Dial (for NDSS)
6.15 [4-2-4] Portable Station—NDSS Link Data - Send
6.18 [4-3] DSS Console
→◆ Type
→◆ Dial (for NDSS)
11.2 [9-2] Network Data Transmission
11.3 [9-3] Network Operator (VoIP)
11.4 [9-4] NDSS Key Table

PT Programming Manual References

[511] Manager Assignment

Feature Manual References

13.1.15 PRIVATE NETWORK FEATURES
13.1.20 PRIVATE NETWORK FEATURES—QSIG
13.1.26 Private Network Features—VoIP (Voice over Internet Protocol)

Operating Manual References

1.2.1 Making Calls
2.1.4 Private Network Features—NDSS (Network Direct Station Selection) Monitor Release

13.1.18 Private Network Features—Network ICD Group

Description

An Incoming Call Distribution (ICD) Group can include up to 4 destinations at other PBXs in a private network, including the floating extension number of another ICD Group. This is done by assigning a virtual PS as a member of the ICD Group, and then setting the number of a destination at another PBX as the forwarding destination for that virtual PS. This allows multiple ICD groups at remote locations to receive calls together.

In addition to the Ring distribution method, Uniform Call Distribution (UCD) and Priority Hunting can also be selected. (→ 9.1.2 ICD Group Features—Group Call Distribution)

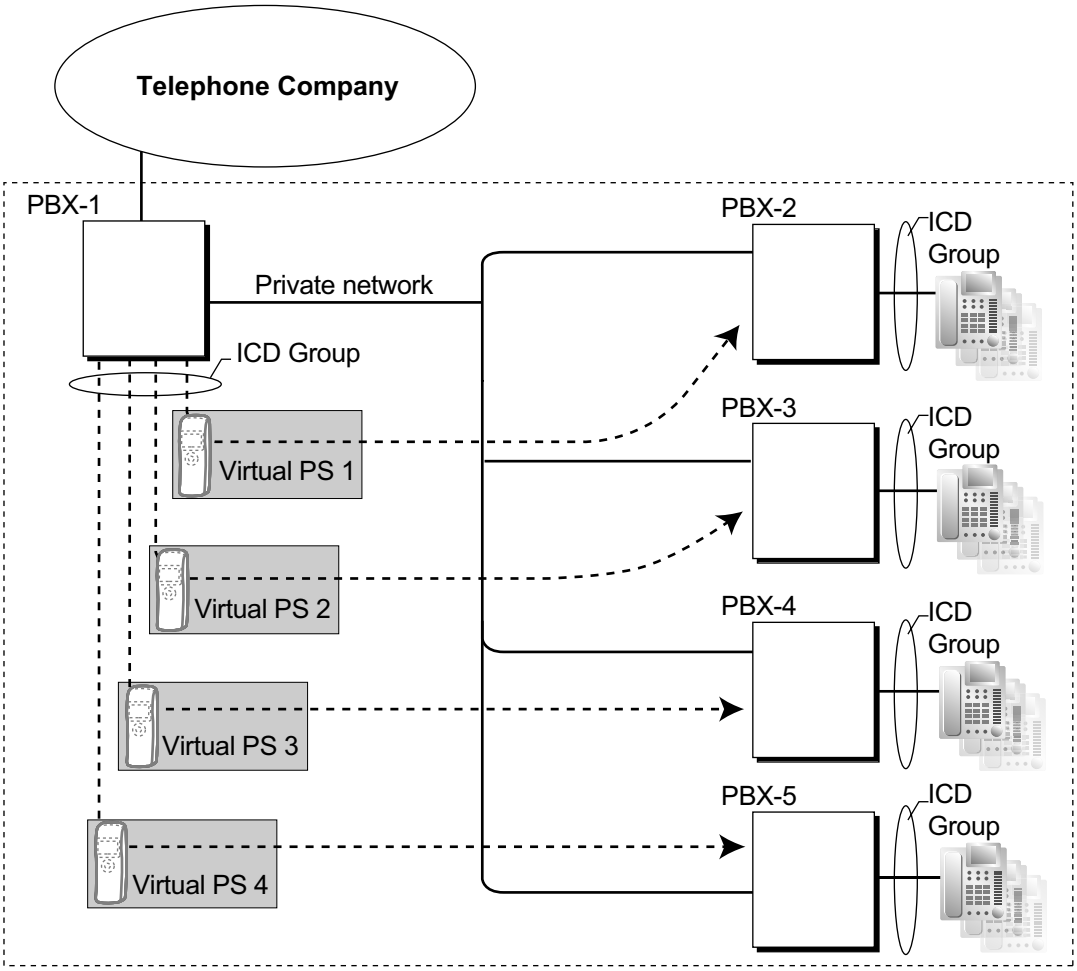

Conditions

- The KX-NCS3910, KX-NCS4910 or KX-NCS4950 (Activation Key for Software Upgrade to Enhanced Version) is required for all PBXs that will support virtual PSs.
- The conditions for **9.1.4 ICD Group Features—Outside Destinations** also apply to this feature.
- Call distribution to the longest idle extension (Automatic Call Distribution) cannot be used with Virtual PS ICD Group members.

PC Programming Manual References

4.18 [2-9] System Options—Option 4
→◆ Send CLIP of CO Caller—when call is forwarded to CO
→◆ Send CLIP of Extension Caller—when call is forwarded to CO

Feature Manual References

9.1.4 ICD Group Features—Outside Destinations
19.1.2 Virtual PS

13.1.19 Private Network Features—PS Roaming by Network ICD Group

Description

One PS can be registered to up to 4 PBXs in a private network, and a Network ICD group created for the PS at each PBX, with virtual PSs set to forward to the other PBXs in the network. When a call to the PS is received at one of the PBXs, the call rings simultaneously at all PBXs in the network to which that PS is registered.

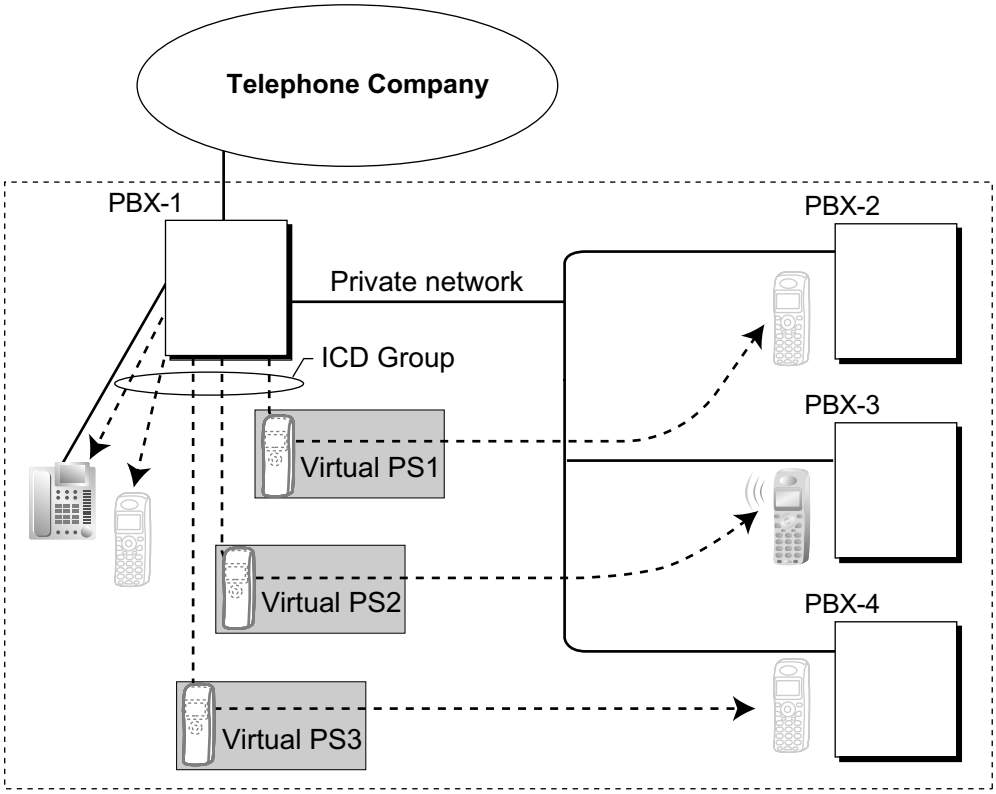

Each virtual PS is set to forward calls to the extension number of the actual PS as registered at one of the other PBXs.
Then, an Incoming Call Distribution (ICD) Group is created containing the registered PS and the virtual PSs. When a call is received at one of the PBXs, it is forwarded to all of the other PBXs. One private network channel is used to forward an incoming call to one other PBX. Therefore, if a PS is registered at 3 other PBXs, 3 private network channels are needed to forward a single call to all of the PBXs.
Each PBX can store the current communication status of each PS (In Range or Out of Range). If the status of the PS is set to Out of Range when a call is received, the call will be refused and the private network channel will be released immediately. Since the PS can only be set to In Range at a single PBX at one time, any other PBXs to which the call is transferred will refuse the call, releasing the VoIP or ISDN channels.

Conditions

- The KX-NCS3910, KX-NCS4910 or KX-NCS4950 (Activation Key for Software Upgrade to Enhanced Version) is required for all PBXs that will support Virtual PSs.
- If no signal is received from a PS for the preprogrammed length of time when an incoming call is received, the communication status of the PS is set to Out of Range, if enabled through system programming.
- When a PS comes within range of a certain PBX, Out of Range status is automatically released. However, in some negative wireless network conditions, Out of Range status may not be released automatically. In

this case, the PS user can manually release Out of Range status by pressing the Talk key and confirming that a dial tone can be heard from the PBX.
- If the status of a PS is set to Out of Range at all PBXs that it is registered to, the call will be redirected to the overflow destination of the ICD Group.
- Handover from one PBX to another PBX during a conversation is not possible.

PC Programming Manual References

4.5 [2-3] Timers & Counters—Miscellaneous—◆ System Wireless—PS Out of Range Timer
4.18 [2-9] System Options—Option 4—◆ System Wireless—Out of Range Registration
5.12 [3-5-1] Incoming Call Distribution Group—Group Settings—Main
→◆ Floating Extension Number
→◆ Distribution Method
5.13 [3-5-1] Incoming Call Distribution Group—Group Settings—Member List

PT Programming Manual References

[620] Incoming Call Distribution Group Member
[622] Incoming Call Distribution Group Floating Extension Number
[624] Incoming Call Distribution Group Distribution Method

Feature Manual References

9.1.4 ICD Group Features—Outside Destinations

13.1.20 PRIVATE NETWORK FEATURES—QSIG

Description

QSIG is a protocol which is based on ISDN (Q.931) and offers enhanced PBX features in a private network. The QSIG network supports private communications by the TIE line service method.
The following features are available for an ISDN-QSIG or VoIP private network. For ISDN, system programming is required to specify whether each feature (excluding Calling Line Identification Presentation [CLIP]) is available for each port of the private network.

[Standard Service Table]

Service	Description & Reference
Calling Line Identification Presentation (CLIP)	Sends the caller's number to the QSIG network when making a call. → 13.1.23 Private Network Features—QSIG—CLIP/COLP (Calling/Connected Line Identification Presentation) and CNIP/CONP (Calling/Connected Name Identification Presentation)
Connected Line Identification Presentation (COLP)	Sends the number of the answered party to the QSIG network when answering a call. → 13.1.23 Private Network Features—QSIG—CLIP/COLP (Calling/Connected Line Identification Presentation) and CNIP/CONP (Calling/Connected Name Identification Presentation)

Service	Description & Reference
Calling Line Identification Restriction (CLIR)	Prevents the caller's CLI being presented to the called party by the caller. → 13.1.23 Private Network Features—QSIG—CLIP/COLP (Calling/Connected Line Identification Presentation) and CNIP/ CONP (Calling/Connected Name Identification Presentation)
Connected Line Identification Restriction (COLR)	Prevents COLP being sent by the answered party. → 13.1.23 Private Network Features—QSIG—CLIP/COLP (Calling/Connected Line Identification Presentation) and CNIP/ CONP (Calling/Connected Name Identification Presentation)
Calling Name Identification Presentation (CNIP)	Sends the caller's name to the QSIG network when making a call. → 13.1.23 Private Network Features—QSIG—CLIP/COLP (Calling/Connected Line Identification Presentation) and CNIP/ CONP (Calling/Connected Name Identification Presentation)
Connected Name Identification Presentation (CONP)	Sends the name of the answered party to the QSIG network when answering a call. → 13.1.23 Private Network Features—QSIG—CLIP/COLP (Calling/Connected Line Identification Presentation) and CNIP/ CONP (Calling/Connected Name Identification Presentation)
Calling Name Identification Restriction (CNIR)	Prevents the caller's name being presented to the called party by the caller. → 13.1.23 Private Network Features—QSIG—CLIP/COLP (Calling/Connected Line Identification Presentation) and CNIP/ CONP (Calling/Connected Name Identification Presentation)
Connected Name Identification Restriction (CONR)	Prevents CONP being sent by the answered party. → 13.1.23 Private Network Features—QSIG—CLIP/COLP (Calling/Connected Line Identification Presentation) and CNIP/ CONP (Calling/Connected Name Identification Presentation)
Call Forwarding (CF)—by QSIG	Forwards a call to the QSIG network. → 13.1.22 Private Network Features—QSIG—CF (Call Forwarding)
Call Transfer (CT)—by QSIG	Transfers a call to the QSIG network. → 13.1.24 Private Network Features—QSIG—CT (Call Transfer)
Completion of Calls to Busy Subscriber (CCBS)—by QSIG	Receives callback ringing when a busy called party on the QSIG network becomes free. → 13.1.21 Private Network Features—QSIG—CCBS (Completion of Calls to Busy Subscriber)

[Enhanced Service Table]

Service	Description & Reference
Network Direct Station Selection (NDSS)	Allows the extensions connected to up to seven other PBXs in a network to be monitored, as well as the transferring of calls to those extensions with one touch. → 13.1.17 Private Network Features—NDSS (Network Direct Station Selection)
Centralized Voice Mail	Allows up to 8 PBXs to share the services of a VPS connected to another PBX in DPT integration. This VPS can provide voice mail for extensions attached to any of the PBXs in the network. → 13.1.16 Private Network Features—Centralized Voice Mail

Feature Manual References

9.1.16 ISDN (INTEGRATED SERVICES DIGITAL NETWORK) FEATURES
13.1.15 PRIVATE NETWORK FEATURES

13.1.21 Private Network Features—QSIG—CCBS (Completion of Calls to Busy Subscriber)

Description

If the call has been made to an extension in another PBX in the QSIG network and the called party is busy, an extension user can set to receive callback ringing when the called party becomes free. When the user answers the callback ringing, that party's number is automatically dialed.

Conditions

- This feature is available under the following conditions:
  a. The caller's PBX is capable of using CCBS.
  b. The called party's PBX is capable of accepting CCBS.
- For ISDN, receiving and sending CCBS must be enabled individually on an ISDN (QSIG) port basis through system programming.
- An extension user can set only one CCBS. The last setting is effective.
- The CCBS setting is canceled if there is no callback ringing within 60 minutes or callback ringing is not answered within 10 seconds.

PC Programming Manual References

3.33 [1-1] Slot—Port Property - PRI Port—Supplementary Service—◆ COLP, CLIR, COLR, CNIP, CONP, CNIR, CONR, CF (Rerouting), CT, CCBS, E911
3.48 [1-3] Option—◆ New Card Installation—ISDN Standard Mode for PRI23 Card

13.1.22 Private Network Features—QSIG—CF (Call Forwarding)

Description

The PBX forwards the call to a destination extension in another PBX in the QSIG network. The destination can be set on your own PBX on an extension basis as the forward destination of CO line calls (→ 6.1.6 FWD (Call Forwarding)).
If the same trunk group is used for the incoming call and the forwarded call, the following situation will be possible.

[Example]

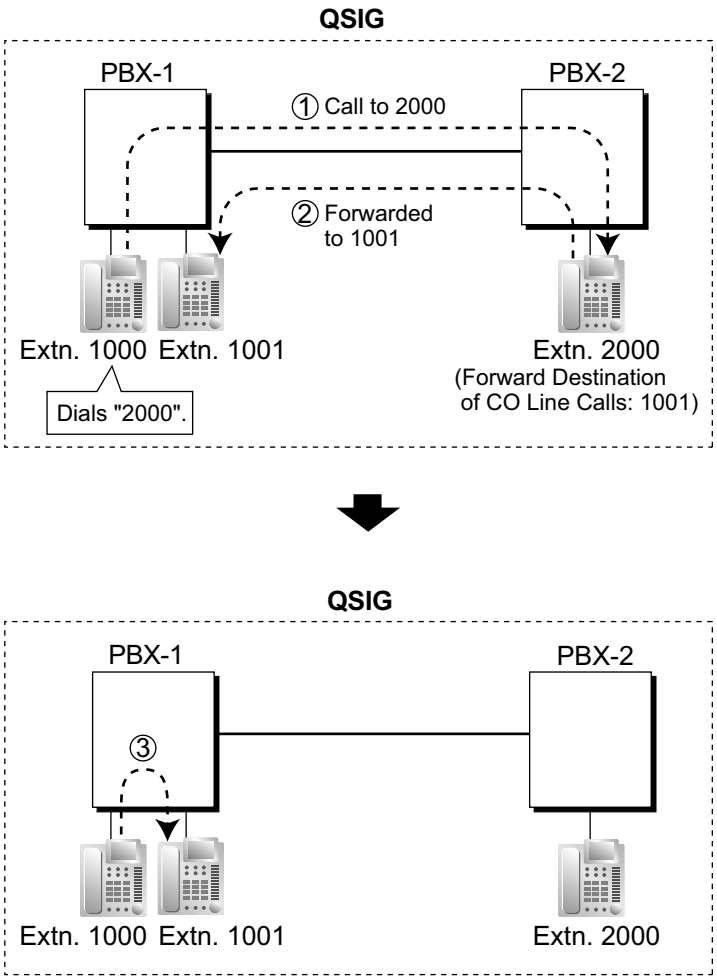

① Extension 1000 of PBX-1 dials extension number "2000", and the call is sent to extension "2000" of PBX-2 through QSIG network.

② The call is forwarded to the forward destination of CO line calls of extension 2000, which is extension "1001" of PBX-1.

③ The call between PBX-1 and PBX-2 is released, and the call is connected directly to the forward destination of extension 2000.

Conditions

- This feature can be enabled or disabled on each ISDN (QSIG) port of the PBX.

PC Programming Manual References

3.33 [1-1] Slot—Port Property - PRI Port—Supplementary Service—◆ COLP, CLIR, COLR, CNIP, CONP, CNIR, CONR, CF (Rerouting), CT, CCBS, E911
3.48 [1-3] Option—◆ New Card Installation—ISDN Standard Mode for PRI23 Card

Operating Manual References

1.3.30 FWD (Call Forwarding)

13.1.23 Private Network Features—QSIG—CLIP/COLP (Calling/Connected Line Identification Presentation) and CNIP/CONP (Calling/Connected Name Identification Presentation)

Description

Calling Line Identification Presentation (CLIP) and Calling Name Identification Presentation (CNIP):

The PBX can send a preprogrammed extension number and/or name to the QSIG network when an extension user makes a call. The called party can see the number and/or name on his telephone display before answering the call.

Connected Line Identification Presentation (COLP) and Connected Name Identification Presentation (CONP):

The PBX sends a preprogrammed extension number and/or name to the QSIG network when the extension user answers an incoming call. The caller can see the number and/or name of the answering party on his telephone display when the call is answered.

[CLIP/CNIP Example]

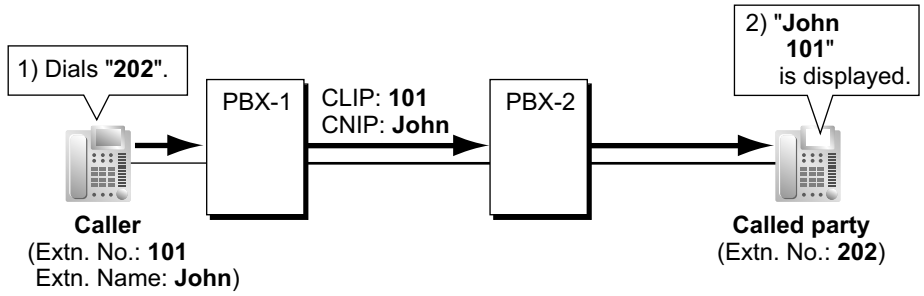

[COLP/CONP Example]

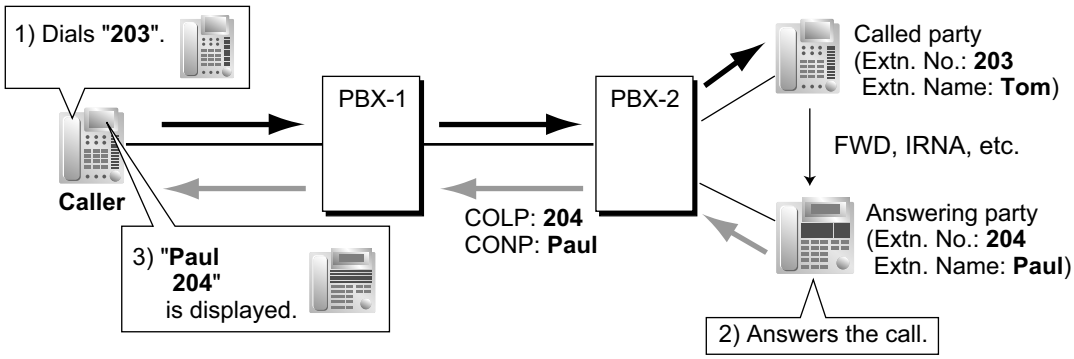

CLIP/COLP Number:

The extension number sent to the QSIG network for CLIP/COLP can be assigned for each extension through system programming.

CNIP/CONP Name:

The extension name sent to the QSIG network for CNIP/CONP can be assigned for each extension through system programming.

Calling/Connected Line Identification Restriction (CLIR/COLR):

It is possible for each extension to restrict the sending of its extension number to the QSIG network by pressing the CLIR button, COLR button, or entering the feature number.

Calling Name Identification Restriction (CNIR) and Connected Name Identification Restriction (CONR)

It is possible for each extension to restrict the sending of its extension name to the QSIG network. When CLIR is activated, CNIR becomes active automatically. When COLR is activated, CONR becomes active automatically.

Conditions

- **COLP/CLIR/COLR/CNIP/CONP/CNIR/CONR Assignment for Each Port**
  Each service can be enabled or disabled on each ISDN (QSIG) port of the PBX.
- **CLIR Button and COLR Button**
  It is possible to switch between CLIP and CLIR by pressing the CLIR button, and COLP and COLR by pressing the COLR button. A flexible button can be customized as the CLIR or COLR button.

PC Programming Manual References

3.33 [1-1] Slot—Port Property - PRI Port—Supplementary Service—◆ COLP, CLIR, COLR, CNIP, CONP, CNIR, CONR, CF (Rerouting), CT, CCBS, E911
4.9 [2-6-1] Numbering Plan—Main—Features
→◆ COLR Set / Cancel
→◆ CLIR Set / Cancel
6.1 [4-1-1] Wired Extension—Extension Settings—Main
→◆ Extension Number
→◆ Extension Name
6.10 [4-2-1] Portable Station—Extension Settings—Main
→◆ Extension Number
→◆ Extension Name

PT Programming Manual References

[003] Extension Number
[004] Extension Name

Feature Manual References

6.1.3 Flexible Buttons

Operating Manual References

1.3.53 Private Network Features—CLIP (Calling Line Identification Presentation)
1.3.54 Private Network Features—CLIR (Calling Line Identification Restriction)
1.3.56 Private Network Features—COLR (Connected Line Identification Restriction)

13.1.24 Private Network Features—QSIG—CT (Call Transfer)

Description

The PBX transfers the call to a destination extension in another PBX in the QSIG network.
If the same trunk group is used for the incoming call and the transferred call, the following situation will be possible.

[Example]

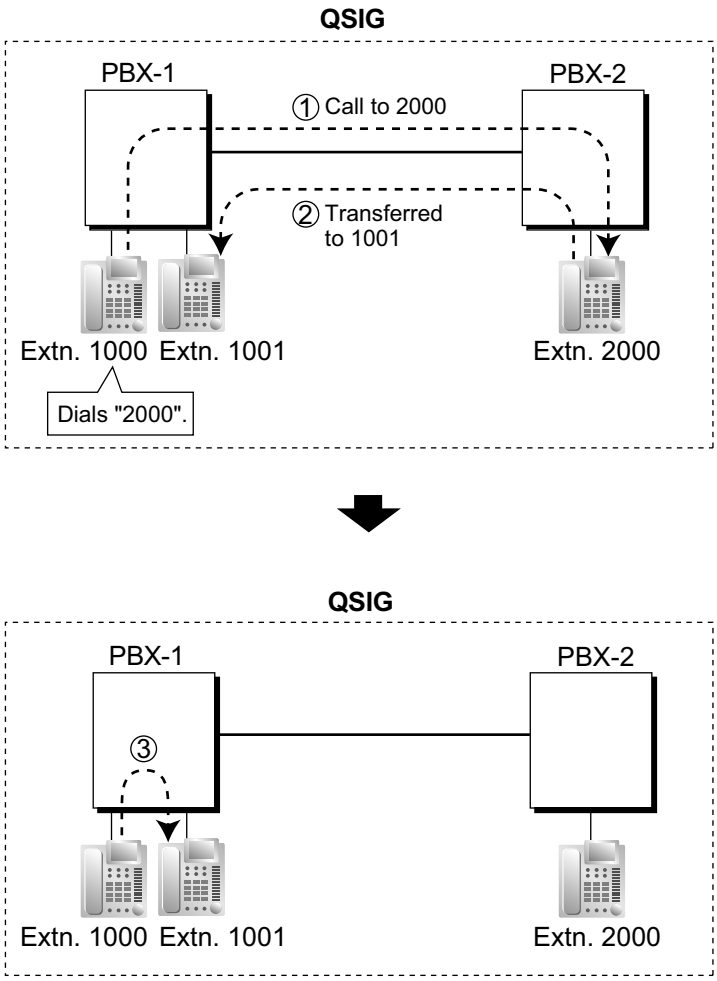

① Extension 1000 of PBX-1 dials extension number "2000", and the call is sent to extension "2000" of PBX-2 through QSIG network.

② The call is transferred from extension 2000 to extension "1001" of PBX-1.

③ The call between PBX-1 and PBX-2 is released, and the call is connected directly to the transfer destination of extension 2000.

Conditions

- This feature can be enabled or disabled on an ISDN (QSIG) port basis.
- Call Transfer with Announcement and Call Transfer without Announcement is possible (→ 3.1.11 Call Transfer).

PC Programming Manual References

3.33 [1-1] Slot—Port Property - PRI Port—Supplementary Service—◆ COLP, CLIR, COLR, CNIP, CONP, CNIR, CONR, CF (Rerouting), CT, CCBS, E911
3.38 [1-1] Slot—Card Property - IP Gateway (KX-TDE series only)—◆ QSIG-CT
3.48 [1-3] Option—◆ New Card Installation—ISDN Standard Mode for PRI23 Card

Operating Manual References

1.3.11 Call Transfer

13.1.25 Private Network Features—QSIG—Enhanced Features

Description

When PBXs are networked using ISDN or V-IPGW/IP-GW cards, the following enhanced features are available.

When Calling an Extension in Another PBX and the Called Extension is Ringing

Feature	Description and Reference
Leave Message Waiting	→ 11.1.3 Message Waiting
Absent Message Display	→ 1.1.1 Absent Message
Ringing extension name display before answer	The ringing extension's name is displayed to the caller before the call is answered.

When the Called Extension of Another PBX is Busy

Feature	Description and Reference
Call Waiting	→ 3.1.12 CALL WAITING FEATURES **Note** When this feature is used over a network, a call waiting tone will be sent, even if OHCA or Whisper OHCA is enabled.
Executive Busy Override	→ 5.1.3 Executive Busy Override
Call Monitor	→ 3.1.7 Call Monitor
Leave Message Waiting	→ 11.1.3 Message Waiting

- When a called extension on another PBX is busy, Automatic Callback Busy can be used as a Standard QSIG feature (→ 13.1.21 Private Network Features—QSIG—CCBS (Completion of Calls to Busy Subscriber)).
- The caller will be informed an extension is busy with a busy tone and a display indication.
- Soft button operation is available for Call Waiting, Automatic Callback Busy and Executive Busy Override.

When the Called Extension of Another PBX has Do Not Disturb (DND) Set

Feature	Description and Reference
DND Override	→ 4.1.10 DND (Do Not Disturb)

- The caller will be informed an extension is set to DND by a DND tone and a display indication.
- Soft button operation is available for DND Override.

When Receiving a Call from an Extension of Another PBX

Feature	Description and Reference
Ring tone	Incoming calls from extensions in other PBXs are handled as intercom calls in regards to ring tone settings. → 15.1.2 Ring Tone Pattern Selection
Call Waiting	Incoming calls from extensions in other PBXs are handled as intercom calls in regards to Call Waiting settings. → 3.1.12 CALL WAITING FEATURES
Call Forwarding (FWD)	Incoming calls from extensions in other PBXs are handled as intercom calls in regards to FWD settings. The Boss and Secretary feature will also function over a network. → 6.1.6 FWD (Call Forwarding)
Do Not Disturb (DND)	Incoming calls from extensions in other PBXs are handled as intercom calls in regards to DND settings. The Boss and Secretary feature will also function over a network. → 4.1.10 DND (Do Not Disturb)
Hands-free Answerback	Incoming calls from extensions in other PBXs are handled as intercom calls in regards to Hands-free Answerback settings. The Class of Service with Hands-free Answerback feature will also function over a network. → 8.1.1 Hands-free Answerback
Internal Call Block	Incoming calls from extensions in other PBXs are handled as intercom calls in regards to the Internal Call Block feature. For example, only branch office managers can be allowed to call the president at the main office, but other extensions in the branch office cannot call the president. → 9.1.14 Internal Call Block → 3.1.23 COS (Class of Service)

During a Call with Another Party

Feature	Description and Reference
Transfer to Busy Extension using Queuing (Camp-on Transfer)	You can transfer a call over the network to a busy extension in another PBX without having to use a Call Waiting operation. → 3.1.11 Call Transfer **Note** Call Transfer over a network is also supported as a standard QSIG feature. (→ 13.1.24 Private Network Features—QSIG—CT (Call Transfer))

For Incoming Calls to an Extension on Another Networked PBX

Feature	Description and Reference
Directed Call Pickup	An extension user can answer a call ringing at another networked PBX extension. → 3.1.9 Call Pickup

Conditions

- The KX-NCS3910, KX-NCS4910 or KX-NCS4950 (Activation Key for Software Upgrade to Enhanced Version) is required for all PBXs in the network to use these features. Furthermore, all PBXs in the network must be KX-NCP or KX-TDE series with MPR Software Version 4.1000 or later.
- Enhanced QSIG features can be disabled at the TIE Table level through system programming.
- Calls made by accessing a CO line via an S-CO button or Trunk Group Access feature number, etc. cannot use enhanced QSIG features because they do not refer to the TIE Table. This includes calls made from the call log of the KX-NT400, or from the call history of Communication Assistant (CA) because such calls specify a trunk group directly.
- Calls forwarded using CF (Call Forwarding) by QSIG cannot use enhanced QSIG features.
- **Leave Message Waiting**
  Over a network, the Message Waiting set/cancel/callback feature number cannot be used to set or cancel Message Waiting.
- **Executive Busy Override**
  When executive busy override is used to interrupt a call between an extension in another PBX and an outside caller to make a 3-party conference call, and then the extension in the other PBX leaves the conversation, the call will be considered a CO-to-CO line call. If enabled through system programming, the call will be terminated at this time.
- **Directed Call Pickup**
  - **When dialing using the PBX Code Method (Access with PBX Code)**
    Dial as follows: [TIE Line Access Number] + [PBX Code of ringing extension] + [Directed Call Pickup feature number] + [Ringing extension number].
    For example, to pickup the ringing extension 101 that is in another PBX with the PBX Code 123, you would dial "7-123-✳41-101".
  - **When dialing using the Extension Number Method (Access without PBX Code)**
    Dial as follows: [All but last digit of the ringing extension number + ✳] + [Directed Call Pickup feature number] + [Ringing extension number].
    For example, to pickup the ringing extension 321 over a network, dial "32✳-✳41-321".
  - To use Directed Call Pickup over a VoIP network using Common Extension Numbering for Multiple PBXs, the operation must be predialed, or executed using CTI.
- To use QSIG enhanced features over an IP network, the network should consist of only V-IPGW cards or only IP-GW cards.

PC Programming Manual References

4.18 [2-9] System Options—Option 2—◆ CO - CO Call Limitation—After Conference
11.1 [9-1] TIE Table—Enhanced QSIG

13.1.26 Private Network Features—VoIP (Voice over Internet Protocol)

Description

The PBX can connect to another PBX via a private IP network. In this case, voice signals are converted into IP packets (VoIP) and sent through this network.
VoIP networks support private network communications using TIE line service.

[Example]

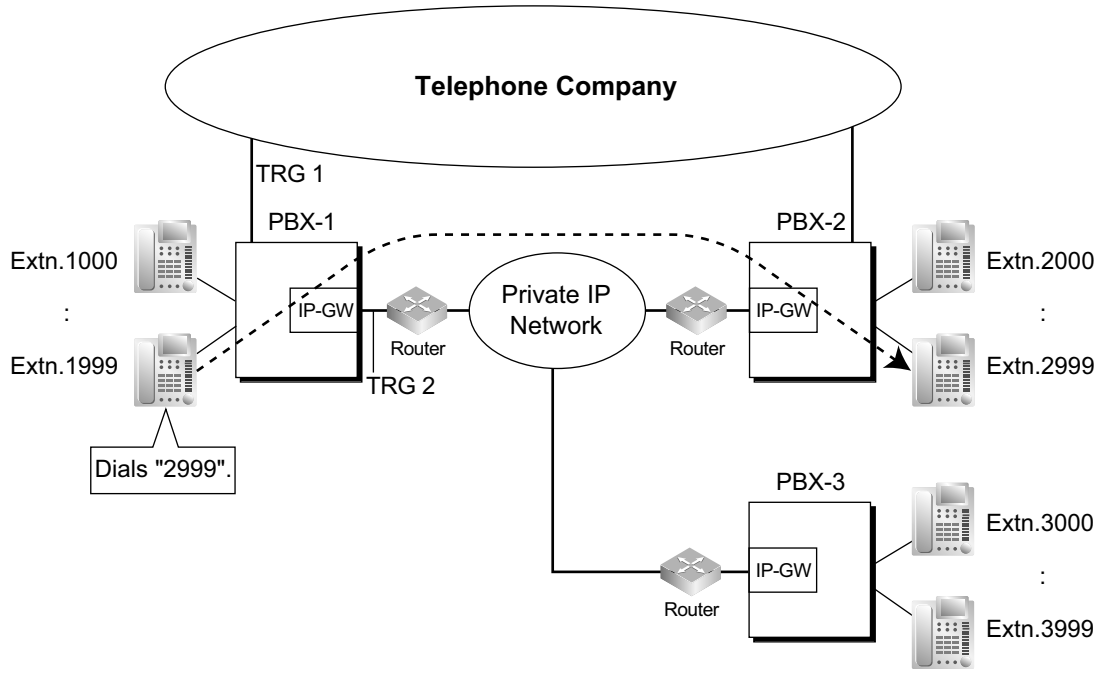

Required Programming

- **PBX**
  For making a call:
  ARS programming (→ 1.1.3 ARS (Automatic Route Selection)) or TIE line service programming
  For receiving a call:
  TIE line service programming

[TIE Line Routing and Modification Table]

Location No.	Leading No.	Priority 1			Priority 2			. .
		TRG	Dial Modification		TRG	Dial Modification		. .
			Removed No. of Digits	Added No.		Removed No. of Digits	Added No.	. .
01	2	2 (VoIP port)	0					. .
02	3	2	0					. .
:	:	:	:	:	:	:	:	:

[Explanation]

Calls to destinations with leading number "2" or "3" are automatically routed through the VoIP ports, designated as trunk group 2.

- **IP Gateway**
  IP address assignment for the local PBX and other PBXs.
  [Programming Example]

Destination	
Leading No.	**IP Address**
2	200.45.11.35
3	199.176.64.1
:	:

[Explanation]

Calls are routed to the IP address of each V-IPGW/IP-GW card based on the leading number dialed.

Gateway Groups

It is possible to automatically reroute outgoing VoIP calls according to preassigned gateway groups.
A gateway device can be assigned a gateway group number based on its IP Address. When a call is made using a leading number allocated to a gateway group, it is routed to the lowest-numbered available device within that group. In other words, if the lowest-numbered device is busy or not available, the call slides to the next available device.

[Example]

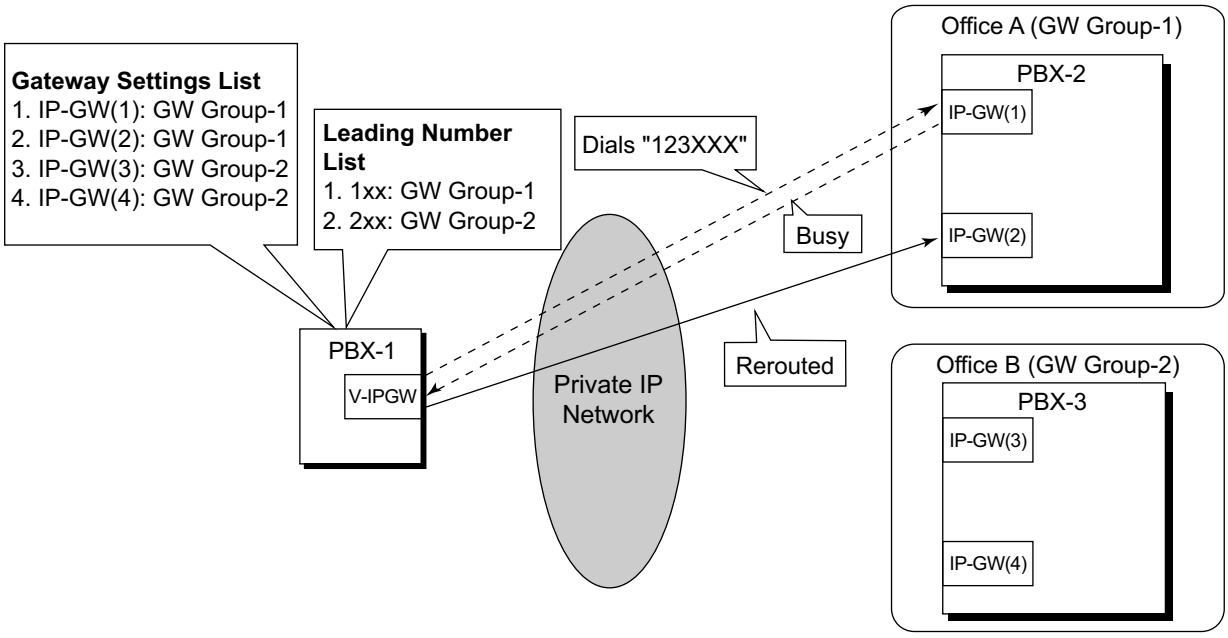

When "123XXX" is dialed, the call is routed to GW Group-1. However the lowest-numbered device (IP-GW(1)) is busy or not available, so the call is rerouted to IP-GW(2).

Note

For information about assigning groups when using the IP-GW card, refer to the Programming Guide of the VoIP Gateway Card.

Common Extension Numbering for Multiple PBXs

Multiple PBXs in separate locations, connected in an IP network, can share a common block of extensions designated in a gateway group.

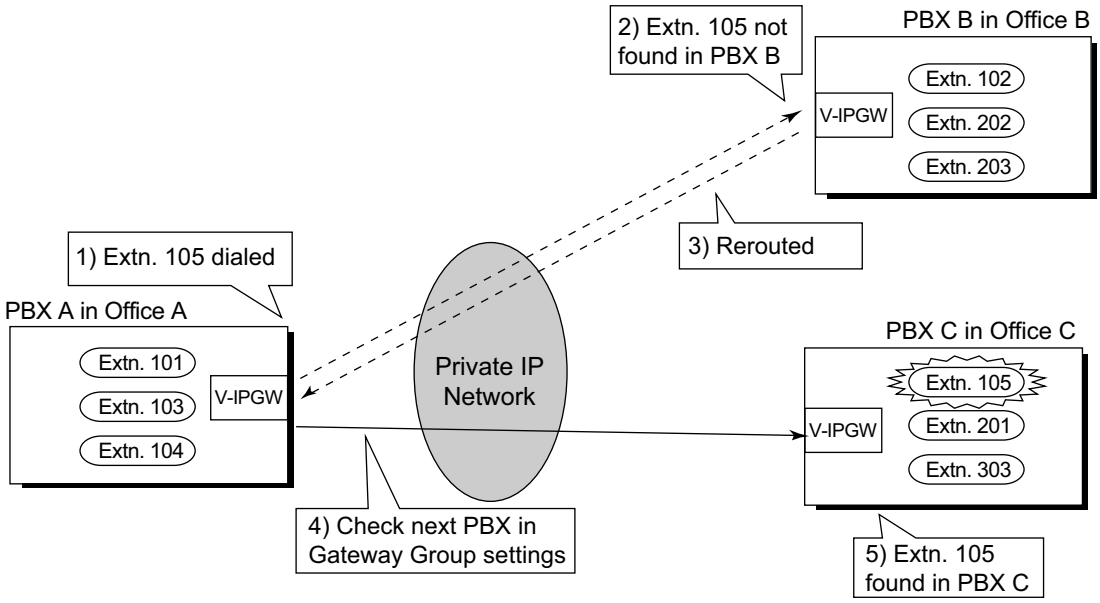

Explanation:

In the same way as when connected by a TIE Line, if a dialed number is not found at the local PBX, the call can be sent to other PBXs connected via an IP network. When an extension number is dialed, the PBX first searches local extensions for a matching number. If there is no match, the PBX then checks the TIE Line Routing Table for the Gateway Group for a corresponding entry. If an entry is found, the call is sent to the connected PBX.

Automatic Rerouting of VoIP Calls to Public CO Lines

When a VoIP call cannot be completed successfully, the PBX can automatically attempt to make the call using a public CO line instead. This provides a backup method of making calls in cases when IP network transmission cannot be completed successfully.

[Example]

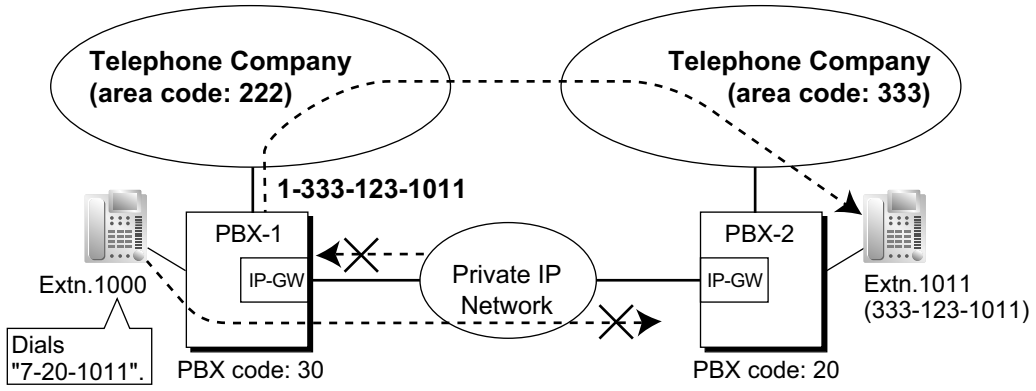

The leading numbers of extensions accessed through the VoIP network are added as entries to the Quick Dialing table, in addition to being registered as Other PBX Extension Numbers, as shown below:

[Programming Example]

Number to dial to call an extension at another PBX using VoIP network:
7 (TIE line access number) + 20 (PBX Code) + 1011 (extension number)

Number to dial to call that extension using a public CO line:
9 (CO line access number) + 1-333-123-1011
[Quick Dialing Table]

Quick Dialing No.	Destination No.
720	91333123

If the call cannot be completed using the VoIP network, and the dialed leading number is found in the Quick Dialing Table, the call will be automatically rerouted to a CO line and as specified by the corresponding destination number.
When a call is made using the VoIP network, if the PBX does not receive a reply from the other PBX within about 4 seconds of making the call, or an error is returned, the call is rerouted to a public CO line as specified.

Automatic Rerouting of VoIP Calls to Public CO lines using ARS

When dialing an outside party using ARS, the call can be rerouted to a public CO line if the call cannot be completed successfully.

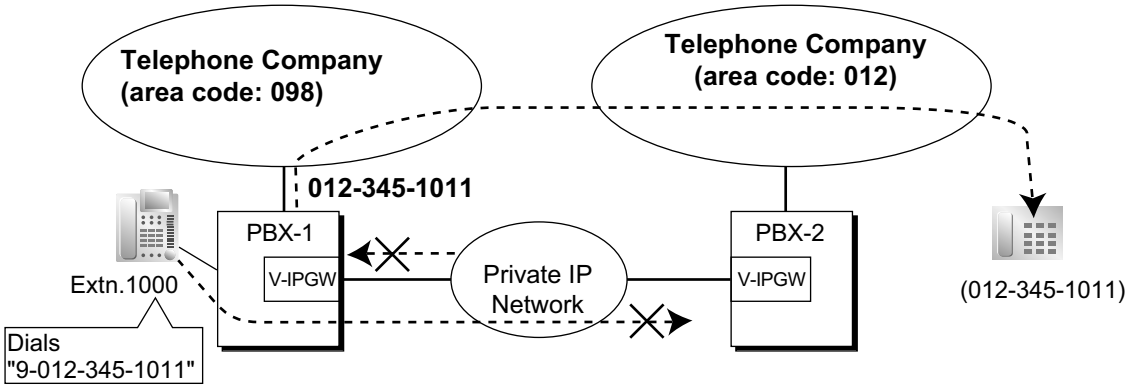

Explanation:

1. An extension of PBX-1 dials the Idle Line Access number of PBX-1 "9" and telephone number "012-345-1011".
2. PBX-1 modifies and routes the call to PBX-2 through a private IP network according to the ARS programming of PBX-1.
3. The IP network transmission cannot be completed successfully and the call is rerouted via a public CO line to the outside party "012-345-1011".

[Quick Dialing Table]
The leading number (in this case, "9") of the dialed number is found in the Quick Dialing Table, and the call is automatically rerouted to the specified trunk group. It is necessary to specify a trunk group to make this type of call. If the idle line access number is used in a destination number, the call will be rerouted through the same private IP network according to the ARS programming, and the call will not be completed.

Quick Dialing No.	Destination No.
9	802

Sending Faxes Through the Network
Through system programming, it is possible to select whether faxes are sent using analog or T.38 protocol signals.

Conditions

[General]

- Some QSIG services are available. (→ 13.1.20 PRIVATE NETWORK FEATURES—QSIG)
- Toll Restriction (TRS) settings apply to calls rerouted to public CO lines. When making a call using System Speed Dialing, regular TRS settings are applied, even if the TRS Override by System Speed Dialing feature is enabled. (→ 17.1.6 TRS (Toll Restriction))

[Common Extension Numbering for Multiple PBXs]

- The KX-NCS3910, KX-NCS4910 or KX-NCS4950 (Activation Key for Software Upgrade to Enhanced Version) is required to use this feature.
- System programming is required to enable this feature.
- If the called extension does not exist at the called PBX, the next PBX in the same gateway group is called automatically.
- The Routing to Operator setting in system programming must be disabled to use this feature.
- To use this feature, all PBXs in the IP network have to be KX-NCP or KX-TDE series PBXs, version 3.0000 or later.

Installation Manual References

KX-NCP500/KX-NCP1000

3.4.1 Virtual Cards

KX-TDE100/KX-TDE200

3.4.1 Virtual Cards
3.5.5 IP-GW4E Card (KX-TDA0484)
3.5.6 IP-GW16 Card (KX-TDA0490)

KX-TDE600

3.4.1 Virtual Cards
3.7.5 IP-GW4E Card (KX-TDA0484)
3.7.6 IP-GW16 Card (KX-TDA0490)

PC Programming Manual References

3.7 [1-1] Slot—Port Property - Virtual IP Gateway Port
3.39 [1-1] Slot—Port Property - IP-GW Port (KX-TDE series only)
4.10 [2-6-2] Numbering Plan—Quick Dial—◆ Use quick dial for rerouting to public CO when TIE line does not work
11.1 [9-1] TIE Table
12.6 [10-4] Miscellaneous—◆ Intercept—Routing to Operator - No Destination (Destination is not programmed.)

Feature Manual References

1.1.3 ARS (Automatic Route Selection)
13.1.15 PRIVATE NETWORK FEATURES

13.1.27 PS (Portable Station)

Description

A Panasonic portable station (PS) can be used in place of a proprietary telephone (PT), providing wireless access to PBX features and call handling.
Cell Stations (CSs) allow PSs to receive reception within a designated area.

1. **Registration**
   Before a PS can be used, it must be registered with the PBX through system programming and assigned an extension number.
   → 3.47 [1-2] Portable Station—PS Registration and De-registration—◆ Registration
   → [690] PS Registration
   Because a PS transmits radio waves, it is possible that a PS belonging to a neighboring PBX can be registered to your PBX. To prevent this sort of unauthorized registration, a personal identification number (PIN) can be programmed for this PBX that must be entered on the PS during registration. This PIN, if programmed, is only used during the PS registration process.
   → 3.47 [1-2] Portable Station—PS Registration and De-registration—◆ Personal Identification Number
   → [691] PS Termination
   Each PS can be registered to more than one PBX if necessary, and registration can be canceled if a PS will no longer be used with one of these PBXs.
   → 3.47 [1-2] Portable Station—PS Registration and De-registration—◆ De-registration
   → [692] Personal Identification Number (PIN) for PS Registration
2. **Connection**
   There are two ways a PS can be used.
   As an Extension
   A PS is assigned its own extension number when it is registered to a PBX. The PS can use this extension number to make and receive calls, just as a wired telephone can. A PS can be a member of an incoming call distribution (ICD) group, can be assigned as the destination for redirected calls, etc., just as a wired telephone can.
   A PS can also be a member of a PS ring group (→ 13.1.31 PS—Ring Group). A PS ring group is a way for several PSs to be notified of an incoming call simultaneously, but does not offer all of the features provided by an ICD group. (→ 9.1.1 ICD GROUP FEATURES)
   In Wireless XDP Parallel Mode
   A PS can share an extension number with a wired telephone, allowing extension users to use their PSs when they are away from their desks to answer or make calls as if they were using their wired telephones. (→ 20.1.5 Wireless XDP Parallel Mode)
3. **PS Interaction with CS**
   Each PS communicates with the PBX wirelessly through a cell station (CS). Each CS is connected to the PBX and sends and receives radio waves to and from different PSs within its range, using different channels for different PSs.
   A PS must be within range of a CS in order to be used, however, multiple CSs can be used with the same PBX to offer a greater area of wireless coverage. Additionally, a PS does not need to be used with a specific CS; any PS can communicate with any CS provided the PS is registered to the PBX, and provided the CS has at least one channel available.

Handover

If a PS is within range of more than one CS, the PS will communicate with the CS which has the greatest signal strength and an available channel. When a PS user moves out of range of one CS and moves in range of another CS, the PS will "hand over" its communications to the new CS. Handover is possible when:

a. The PS is on an intercom call or on a call with an outside party. (The call will not be disconnected during the handover.)
b. A call is ringing at the PS. (The call will continue to ring after the handover.)
c. The PS is in idle status (i.e., waiting to receive calls).

[Example of Handover]

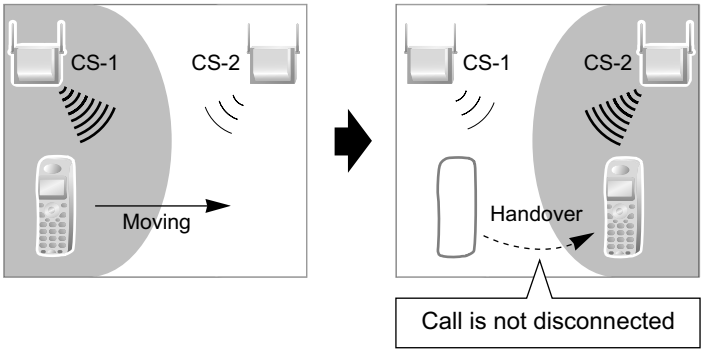

Handover is not possible when the PS is:

a. Not within range of another CS.
b. Within range of another CS but that CS is busy.
c. Screening a call via Live Call Screening (LCS) or recording a call via Two-way Record (→ 19.1.4 Voice Mail DPT (Digital) Integration)
d. Paging other extensions. (→ 13.1.1 Paging)
e. On a doorphone call.
f. Dialing digits to make a CO line call.
g. On a call with an extension which is recording the conversation via PC Console or PC Phone.

IP Cell Station

The IP Cell Station Unit (IP-CS) can be connected to a PBX via a LAN. The IP-CS supports existing DECT 6.0 Portable Stations (PSs) with the same features as using a traditional CS. The IP-CS allows for easy and cost-saving installation using an existing IP network infrastructure.
The IP-CS provides the following:

– Wireless systems using a converged voice and data network infrastructure.
– Wireless branch offices and wireless solutions by long distance installation on larger premises.
– Reliable wireless communication using DECT 6.0 technology over an IP network.

For more information about IP-CSs, refer to the IP-CS Quick Installation Guide.

Conditions

- If every CS that a PS is in range of is busy when that PS is called, the call will not be connected and the caller will hear a busy tone.
- For more information about connecting PSs to CSs, see the Quick Installation Guide for the relevant CS.
- The number of digits allowed for a PS extension number is determined by the PS model. See your PS documentation for details.

PC Programming Manual References

3.47 [1-2] Portable Station

PT Programming Manual References

[690] PS Registration
[691] PS Termination
[692] Personal Identification Number (PIN) for PS Registration

Feature Manual References

6.1.4 Flexible Numbering/Fixed Numbering

13.1.28 PS—CO Status Display (KX-WT125/KX-WT126 only)

Description

The status of CO lines selected through system programming can be displayed on the KX-WT125/KX-WT126, even when the PS is idle. For information about PS settings and conditions, refer to the documentation for the KX-WT125/KX-WT126.

Conditions

- To use the CO Status Display feature of the KX-WT125 and KX-WT126, the following versions are required:
  DHLC/DLC card: LPR software version 7.003 or later
  CSIF card: LPR software version 4.006 or later
  BUS-S card (KX-TDE600 only): LPR software version 3.012 or later
  DECT 6.0 CSs: software version 7.000 or later
- A maximum of 12 CO lines can be selected for this feature using system programming.
- This feature can be disabled using system programming. However, disabling this feature will also disable the display of single CO line numbers on the PS.
- If a CO line other than those specified in system programming or a feature is assigned to a flexible button of the PS, the CO line status will not be displayed for that button while the PS is idle or when receiving a call as a member of a PS ring group.

PC Programming Manual References

3.48 [1-3] Option—◆ System Wireless—CO Status Display in Standby (KX-WT125/126 only) (Need System Restart)
6.17 [4-2-6] Portable Station—Single CO Appearance

13.1.29 PS—Directory

Description

A portable station (PS) user can make a call or access PBX features using information stored in the PS and PBX.
Refer to the Operating Instructions supplied with your PS for available directories and usage.

Directory Type	Description	Programming
PS Dialing Directory	A list of names and telephone numbers. Used to make a call to one of the stored parties.	Stored in the PS by the PS user.
Quick Dialing	A list of frequently dialed feature numbers as well as names and telephone numbers. Used to quickly access one of the stored features, or quickly make a call to one of the stored parties.	Stored in the PS by the PS user.
System Speed Dialing Directory	A system-wide list of names and telephone numbers. Used to make a call to one of the stored parties.	Stored in the PBX.

Directory Type	Description	Programming
PBX Extension Dialing Directory	A system-wide list of extension names. Used to make a call to one of the stored extensions.	Stored in the PBX.

PC Programming Manual References

6.1 [4-1-1] Wired Extension—Extension Settings—Main—◆ Extension Name
6.10 [4-2-1] Portable Station—Extension Settings—Main—◆ Extension Name
8.1 [6-1] System Speed Dial
→◆ Name
→◆ CO Line Access Number + Telephone Number

PT Programming Manual References

[001] System Speed Dialing Number
[002] System Speed Dialing Name
[004] Extension Name

13.1.30 PS—Feature Buttons

Description

Although a portable station (PS) does not feature as many buttons as a proprietary telephone (PT), a PS can be customized to give a PS user access to PBX features, just as the flexible buttons on a PT can be customized. (→ 6.1.3 Flexible Buttons)

13.1.31 PS—Ring Group

Description

A PS ring group is a way for several portable stations (PSs) to be notified of an incoming call simultaneously, while using only one channel of a cell station (CS).
Normally when a PS receives a call, one channel of a CS is used to ring the PS (→ 13.1.27 PS (Portable Station)). If several PSs are members of an incoming call distribution (ICD) group, the available channels of a CS will become busy just by ringing each PS. Assigning a group of PSs to a PS ring group alleviates this strain on the CS because only one channel is needed to ring a PS ring group's members.
PS ring group members and related parameters are assigned through system programming, as explained below.

a. **Floating Extension Number:** When this number is called, all PSs in the group ring.
b. **Group Name:** Can be displayed on a ringing PS to indicate that the incoming CO line call is a group call, and not a call directed to the PS's extension number. This is only available when Incoming CO Line Call Information Display is set to "**`Called Number`**".
c. **Incoming CO Line Call Information Display:** Determines which information is shown on the PS display when a group call is received. Select "**`Caller ID`**" to display the caller's telephone number or name, or "**`Called Number`**" to display the name of the PS ring group which is receiving the call.
d. **Member PSs:** Select each PS that will be a member of the corresponding PS ring group. Note that a PS can belong to more than one PS ring group.

[Programming Example: PS Ring Group]

	PS Ring Group 1	PS Ring Group 2	PS Ring Group 3
Floating Extension No.	301	302	303
Group Name	Sales 1	Sales 2	Customer Service
Incoming CO Line Information Display	Caller ID	Called Number	Caller ID
PS 1	✔		
PS 2	✔		
PS 3	✔	✔	
PS 4		✔	
PS 5		✔	
PS 6			✔
PS 7			✔
PS 8			✔

✔ PS Ring Group Member

[Example of PS Ring Groups 1 and 2]

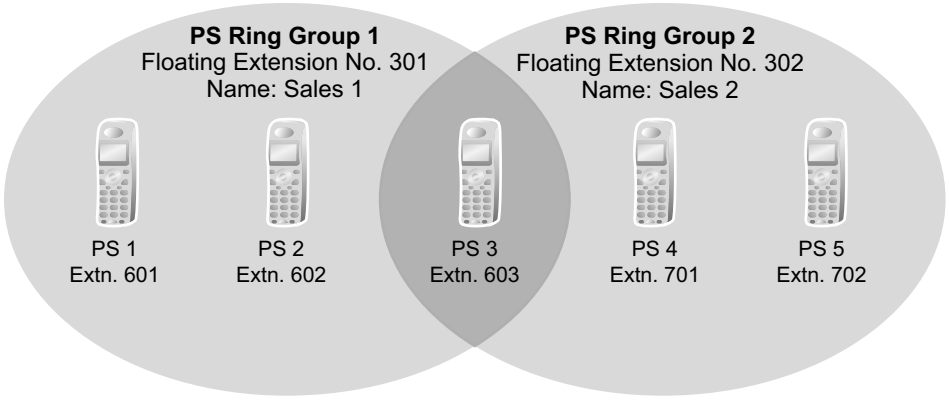

Explanation:
PS Ring Group 1
PS 1, PS 2, and PS 3 will ring simultaneously when a call is directed to floating extension number 301, and, in the case of a CO line call, will display the Caller ID information for the call.
These PSs will ring individually when a call is directed to their assigned extension numbers (programming not shown here).
PS Ring Group 2
PS 3, PS 4, and PS 5 will ring simultaneously when a call is directed to floating extension number 302, and, in the case of a CO line call, will display "Sales 2".
These PSs will ring individually when a call is directed to their assigned extension numbers (programming not shown here).

ICD Groups vs. PS Ring Groups

Assigning PSs to either an ICD group or a PS ring group will allow multiple PSs to receive group calls simultaneously. The differences between the two are highlighted below:

Features	PS Ring Group	ICD Group
Members can ring simultaneously when a call is received	✔	✔

Features	PS Ring Group	ICD Group
Calls can be distributed to member extensions using different methods		✔
The CS is less likely to be busy; ringing all member PSs uses only one CS channel	✔	
Members can log-in, log-out, and use Wrap-up time, ICD Group button		✔
Both PTs and PSs can belong to the same group		✔
Each member can belong to more than one group	✔	✔
Calls can wait in a queue if they cannot be answered		✔

[Example of CS Channels Used for PS Ring Group Calls and ICD Group Calls]

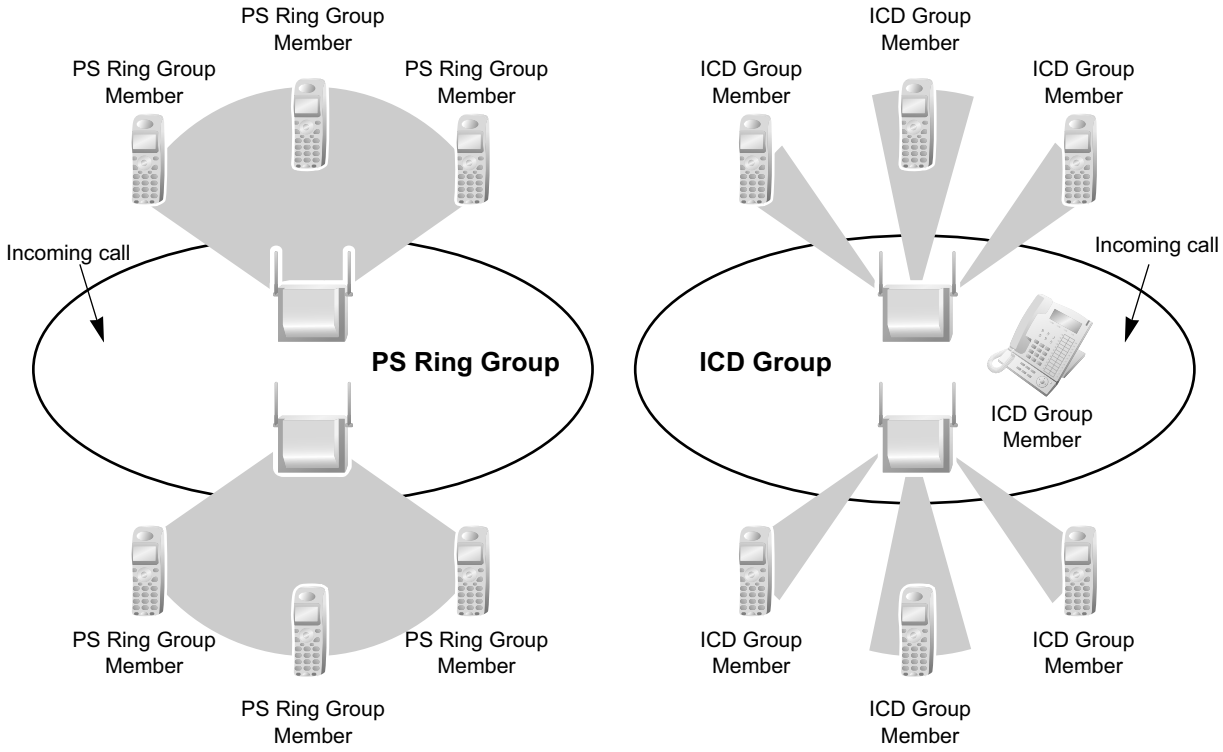

Explanation:
The PS ring group has six members which are in range of two different CSs. When a call arrives, each CS uses one channel to ring all member PSs within its range.
The ICD group has one proprietary telephone (PT) member, as well as six PS members which are in range of two different CSs. When a call arrives, each CS uses three channels to ring each of the member PSs within its range.

Conditions

- A maximum of 32 PS ring groups can be programmed.
- Each member of a PS ring group must be a PS, but each member does not need to be in range of the same CS. When a call is directed to a PS ring group, all CSs connected to the PBX will try to ring members of the group.

- PS ring groups do not have Log-in or Log-out features. There is no way for a PS to log-in to or log-out from a PS ring group.
- A PS ring group may be assigned as a member of an ICD group, but the PS ring group cannot log-in to or log-out from an ICD group. The PS ring group (and therefore its members) will always be logged-in.
- When a PS is assigned to a PS ring group, the following settings are used if it receives a call directly, but are disregarded when it receives a group call:
  a. Delayed Ringing (All PSs will ring simultaneously.)
  b. The incoming call display preference assigned to the PS through system programming.
  c. Features set on the PS, such as Call Forwarding (FWD). Note, however, that if a PS user has set Do Not Disturb (DND), that PS will not ring for group calls either.
- When a call is directed to a PS ring group, the PBX will try to ring the group's members regardless of whether or not they are already on another call. If all members of a PS ring group are busy when the group is called, their PSs will not ring but the caller will hear a ringback tone.
- A PS ring group will only ring one call at a time on its member PSs. If a PS ring group is ringing one call when another call is directed to the group, the group will appear busy to the caller. If a call is directed to a specific PS within the group in this situation and the PS is available to answer calls, the PS will ring as usual.
- The PBX will ring calls for only two PS ring groups at a time. In other words, if two calls directed to two different PS ring groups are ringing, no other PS ring group calls will ring until one of the other ringing calls is answered.
- If a PS in a PS ring group has set the DND feature for CO line calls, the PS will not ring for CO line calls as well as intercom calls directed to the group.
- **Compatible PSs**
  The following PSs can be assigned to PS ring groups:
  – KX-TCA185
  – KX-TCA285
  – KX-TCA385
  – KX-TD7680
  – KX-TD7684
  – KX-TD7685
  – KX-TD7690
  – KX-TD7694
  – KX-TD7695
  – KX-TD7696
  – KX-WT125
  – KX-WT126

PC Programming Manual References

5.12 [3-5-1] Incoming Call Distribution Group—Group Settings—Main—◆ Distribution Method
5.24 [3-9] PS Ring Group
5.25 [3-9] PS Ring Group—Member List

PT Programming Manual References

[620] Incoming Call Distribution Group Member

Feature Manual References

4.1.10 DND (Do Not Disturb)
9.1.1 ICD GROUP FEATURES

21.1 Capacity of System Resources

13.1.32 PT Programming

Description

A proprietary telephone (PT) can be used to customize the settings of the PBX or of an extension, using the following programming features:

Programming Type	Description	Example	Authorized Programmer
Personal Programming	Used by an extension user to customize the extension's settings.	PT Display Language, Call Waiting Tone, etc.	Extension user
System Programming	Used by an authorized party to customize the PBX.	Intercept Destination, ARS Mode, Date and Time, etc.	Authorized administrator or extension user
Manager Programming	Used by an extension assigned as a manager to customize the current state of an extension, or to grant special privileges temporarily to an extension user.	Switching the current time mode, Remote Extension Dial Lock, Remote PIN Clear, etc.	Extension assigned as a manager

Conditions

- Class of Service (COS) programming determines the level of programming an extension user is authorized to perform:
  - System programming and personal programming
  - Personal programming only
  - No programming may be performed
- System programming can be performed only from a multi-line display DPT or IP-PT. Multi-line display APTs are not supported.
- The extension which is connected to the lowest numbered port on the card installed in the lowest numbered slot can perform both personal programming and system programming regardless of the extension's COS.
- COS programming determines which extensions are manager extensions and can therefore perform manager programming.
- During programming, the PT is considered to be busy and will not receive calls.
- Only one system programming (including PC programming) or manager programming session is permitted at a time, i.e., these two programming features cannot be performed simultaneously by two users. The maximum number of simultaneous programmers that each PBX supports is as follows:
  - one system programmer + 63 personal programmers
  - one manager programmer + 63 personal programmers
  - 64 personal programmers
- **System Programming Password Level**
  To access system programming, a valid password must be entered. (→ 13.1.3 Password Security)
- **Personal Programming Data Reset**
  A PT user can return settings made through personal programming (Preferred Line Assignment, Live Call Screening Mode, etc.) to their default settings all at once.

PC Programming Manual References

4.12 [2-7-1] Class of Service—COS Settings—Manager—◆ Programming Mode Level
13.1 [11-1] Main—Password
→◆ System Password - PT Programming—Prog ** : User Level
→◆ System Password - PT Programming—Prog *# : Administrator Level
→◆ Manager Password - PT Programming—Prog *1

PT Programming Manual References

2.1 PT Programming
[516] Programming Mode Limitation

Feature Manual References

3.1.23 COS (Class of Service)
11.1.1 Manager Features
21.1 Capacity of System Resources

Operating Manual References

3.1 Personal Programming
3.2 Manager Programming
3.3 System Programming

Section 14

Features and Configurations—Q

14.1 Q

14.1.1 Quick Dialing

Description

An extension user can make a call or access a feature easily. This is enabled by storing the number (extension number, telephone number, or feature number etc.) for Quick Dialing.
Quick Dialing is convenient in situations such as the following:

– Room service calls in a hotel
– Calling your company's headquarters via the public network. Extension users can think of the Quick Dialing number as an extension number.

[Programming Example: Quick Dialing]

Location No.	Quick Dialing No.	Desired Number
Quick Dialing 01	110	9110 (CO Line Call)
Quick Dialing 02	5	3016 (Room Service)
Quick Dialing 03	2011	90123456789 (Headquarters)

Conditions

- Quick Dialing numbers follow the flexible numbering plan.
  (→ 6.1.4 Flexible Numbering/Fixed Numbering)

PC Programming Manual References

4.10 [2-6-2] Numbering Plan—Quick Dial

Feature Manual References

21.1 Capacity of System Resources

Operating Manual References

1.3.58 Quick Dialing

14.1.2 Quick Setup

Description

Basic PBX parameters can be programmed the first time the PBX is accessed with a PC using the Maintenance Console software.
When the PBX is accessed with the Installer Level Programmer Code and default password (→ 13.1.3 Password Security), for the first time (i.e., accessed after the PBX's settings have been initialized or when the PBX's settings are still set to their default values), Quick Setup will launch automatically. From here the following basic parameters can be programmed as desired:

Item	Parameter	Description
Date & Time Set	Year/Month/Date/Hour/ Minute	The date and time set on the PC can be used by default.
System Password for Installer	4–10 characters	Enter the system password for installer (→ 13.1.3 Password Security).
Manager Extension and Operator	Extension Number	Assign an extension as a manager extension (→ 11.1.1 Manager Features) and an extension as a PBX operator (→ 12.1.5 Operator Features).
Flexible Numbering —Feature	**1.** Pattern 1 (with ✳) **2.** Pattern 2 (without ✳)	Select whether or not the prefix "✳" must be entered before dialing feature numbers. **[Example]** Call Pickup feature number **Pattern 1 (with ✳):** ✳41 **Pattern 2 (without ✳):** 41 Note that certain feature numbers (Line Access numbers, Operator Call, etc.) never need this prefix. For a list of the default flexible numbers, refer to the [Flexible Numbering Table (available while a dial tone is heard)] (→ 6.1.4 Flexible Numbering/Fixed Numbering).
Flexible Numbering —Extension	KX-NCP500/ KX-NCP1000/ KX-TDE100/ KX-TDE200: From 101/from 201 KX-TDE600: From 1001/from 2001	Determines the number from which default extension numbers begin.
Flexible Numbering —Operator	0/9	The feature number for Operator Call can be selected.
Flexible Numbering—CO Access	0/1/9	The feature number for Idle Line Access can be selected.
DTMF/Pulse Dialing[*1]	Pulse/DTMF	Determines whether DTMF or pulse dialing is used on analog CO lines by default.

Item	Parameter	Description
Set ICD groups as DIL destination for individual CO lines[*1]	Yes/No	Selecting Yes configures the settings of the ELCOT/LCOT card and ICD groups as follows: • The floating extension number of each ICD group is assigned sequentially to the DIL destination of each port of the LCOT card. → 12.2 [10-2] DIL Table & Port Settings—DIL—◆ DIL Destination—Day, Lunch, Break, Night • The first 32 extensions are assigned as members of every ICD group. → 5.13 [3-5-1] Incoming Call Distribution Group—Group Settings—Member List • Group Call Waiting Distribution is enabled for each ICD group. → 5.12 [3-5-1] Incoming Call Distribution Group—Group Settings—Main—◆ Call Waiting Distribution The effect of these settings is that calls arriving on different CO lines simultaneously will cause corresponding S-CO buttons on PTs to light. This configuration is useful in situations such as in a general office. When features such as ICD Group Queuing are required, such as in a call center, select No.
DHCP Client	Enable/Disable	Determines whether to use a DHCP server to assign IP address information automatically or not.
LAN Connection[*2]	• IP Address for MPR Card • IP Address for VoIP-DSP • Subnet Mask • Default Gateway	Manually enter the LAN information when not using a DHCP server.
Virtual Card	–	Select whether to install a V-IPEXT, V-SIPEXT, or V-SIPGW card.

[*1] This setting is displayed only if an ELCOT/LCOT card is already installed when Quick Setup is performed.
[*2] If the DHCP Client setting is set to Enable, this parameter can not be set.

Note that the programmable items may vary depending on the version of Maintenance Console being used.

Section 15

Features and Configurations—R

15.1 R

15.1.1 Redial, Last Number

Description

Every extension automatically saves the last external telephone numbers and extension numbers dialed, allowing the same number to be dialed again. Through system programming, the outgoing call log can be set to log dialed extension numbers.

Outgoing Call Log

Information on outgoing CO line calls and intercom (including TIE) calls is automatically logged at each extension. Users of display PTs can view details of a preset number of recently dialed telephone numbers, and easily call the same party again.

Automatic Redial

If Last Number Redial is performed in hands-free mode and the called party is busy, the number will be automatically redialed a preprogrammed number of times.

This feature is available only on certain proprietary telephone (PT) models which have the SP-PHONE button.

Conditions

- Memorized telephone numbers are replaced by new ones.
- **Interrupt Redial**
  When an outside party, seized CO line, or extension number (including TIE connections) is busy, a user can attempt to redial the number by pressing the REDIAL button without going on-hook. This can be performed several times without having to go on-hook.
- **Outgoing Call Log Display by REDIAL Button**
  The REDIAL button can be programmed through system programming to display the Outgoing Call Log. This feature is available for display PT users while on-hook.
- If the Outgoing Call Log is used to redial an outside party or an extension number (including TIE connections) or if a number that is already stored in the Outgoing Call Log is manually redialed again, the number will be stored in the call log multiple times. However, calls made using the REDIAL button are not stored in the Outgoing Call Log again.
- It is possible to change the number of records that can be stored at each extension through system programming.
- Automatic Redial is canceled if any dialing operations are performed, an incoming call is answered during Automatic Redial, or the Redial Call No Answer Ring Time is expires.
  The Redial Call No Answer Ring time is programmable.
- Automatic Redial is only available for calls that are dialed using a PRI line.
- To log intercom calls in the outgoing call log, refer to "4.18 [2-9] System Options—Option 7—◆ Outgoing Call Log—Extension Call" in the PC Programming Manual.
- Logs for multiple calls to the same destination are combined and displayed with the most recent call log.
- If an extension user makes a call over a TIE connection using the PBX Code method (Access with PBX Code), the outgoing call log does not display the Access Code on the PT's display.
- If an extension user uses a DSS key to make a call to another extension, the user can use the redial feature to call the same extension number.
- If an extension user uses an SDN key to make a call to the corresponding owner extension, the user cannot use the redial feature to call the owner extension again.

PC Programming Manual References

4.5 [2-3] Timers & Counters—Dial / IRNA / Recall / Tone

→◆ Automatic Redial—Repeat Counter
→◆ Automatic Redial—Redial Call Ring Duration
→◆ Automatic Redial—Analog CO Mute / Busy Detection Timer
4.9 [2-6-1] Numbering Plan—Main—Features—◆ Redial
4.18 [2-9] System Options—Option 2
→◆ Redial—Automatic Redial when No Answer (ISDN)
→◆ Redial—Save Dial After Connection to Redial Memory
→◆ Redial—Call Log by Redial key
4.18 [2-9] System Options—Option 7
→◆ Outgoing Call Log—Extension Call
6.1 [4-1-1] Wired Extension—Extension Settings—Option 7—◆ Outgoing Call Log Memory
6.10 [4-2-1] Portable Station—Extension Settings—Option 7—◆ Outgoing Call Log Memory

PT Programming Manual References

[205] Automatic Redial Repeat Times

Feature Manual References

21.1 Capacity of System Resources

Operating Manual References

1.3.59 Redial, Last Number
1.4.1 Call Log, Incoming

15.1.2 Ring Tone Pattern Selection

Description

It is possible to select the type of ring tone pattern that arrives at an extension for each type of incoming call, etc.

[Ring Tone Patterns]

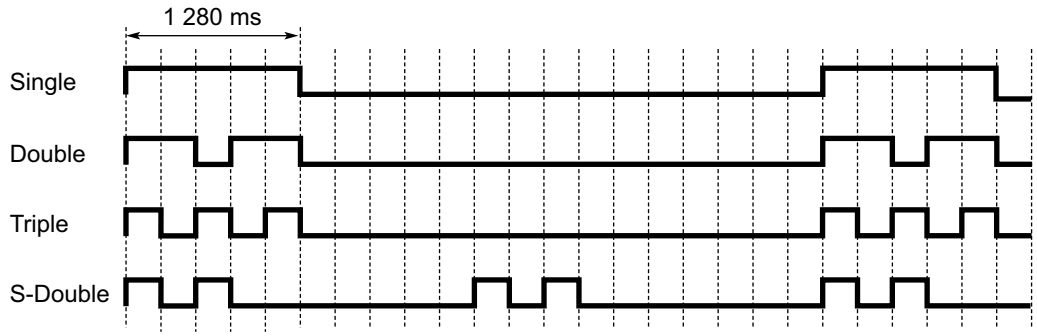

* The duration of a ring tone may vary by country/area.

[Ring Tone Pattern Table]

The ring tone pattern table is categorized into three parts, each containing a specified number of pattern plans. The ring tone pattern table is categorized as follows:

- Incoming CO Line Calls: each pattern plan can assign a ring tone pattern for each trunk group.

4.15 [2-8-1] Ring Tone Patterns—Call from CO

- Incoming Doorphone Calls: each pattern plan can assign a ring tone pattern for each doorphone.
  4.16 [2-8-2] Ring Tone Patterns—Call from Doorphone
- Others: each pattern plan can assign a ring tone pattern for incoming intercom calls as well as ring tones assigned to certain features (e.g., timed reminder).
  4.17 [2-8-3] Ring Tone Patterns—Call from Others

The ring tone patterns that arrive at an extension are determined by the pattern plan that is assigned to that extension through system programming.

[Programming Example of Ring Tone Pattern Table]

Table No.	Intercom Call/Hold Recall	CO Line Call/ Hold Recall		Doorphone Call		Timed Reminder	Call Back	LCS	External Sensor
		TRG1	...	Port 1	...				
1	Double	Single		Single					
2	Single	Double		Double					
:	:	:	:	:	:	:	:	:	:

Conditions

- "**PT Ring Off Setting**" can be enabled or disabled through system programming. If disabled, PT users cannot turn incoming call ringing off for their extension.
- For the S-CO, G-CO, L-CO, ICD Group, INTERCOM, PDN and SDN buttons, one of 30 ring tones can be assigned through personal programming.

PC Programming Manual References

4.15 [2-8-1] Ring Tone Patterns—Call from CO—◆ Ring Tone Pattern Plan 1–8
4.16 [2-8-2] Ring Tone Patterns—Call from Doorphone—◆ Ring Tone Pattern Plan 1–8
4.17 [2-8-3] Ring Tone Patterns—Call from Others—◆ Extension—Ring Tone Pattern Plan 1–8
4.18 [2-9] System Options—Option 1—◆ PT Operation—PT Ring Off Setting
6.1 [4-1-1] Wired Extension—Extension Settings
→Option 1—◆ Ring Pattern Table
→Option 6—◆ ICM Tone
6.5 [4-1-4] Wired Extension—Flexible Button—◆ Optional Parameter (Ringing Tone Type Number) (for Loop CO, Single CO, Group CO, G-DN, SDN)
6.10 [4-2-1] Portable Station—Extension Settings—Option 1—◆ Ring Pattern Table
6.18 [4-3] DSS Console—◆ Optional Parameter (Ringing Tone Type Number) (for Loop CO, Single CO, Group CO, G-DN, SDN)

Feature Manual References

21.1 Capacity of System Resources

Operating Manual References

3.1.4 Customizing the Buttons

15.1.3 Room Status Control

Description

A proprietary telephone (PT) with a 6-line display designated as the hotel operator extension can be used to view and set the Check-in/Check-out/Cleaned-up (Ready or Not Ready) status of guest rooms associated with extensions.
Any wired extension can be used as a room extension without special programming.
Flexible buttons on the hotel operator's extension can be set as Room Status Control buttons. The 3 types of Room Status Control buttons are as follows:

- **Check-in**
  Switches the status of selected room extensions from Check-out to Check-in.

  Remote Extension Dial Lock is turned off, allowing calls to be made from the extension.

- **Check-out**
  Switches the status of selected room extensions from Check-in to Check-out.

  Room extension data, such as Timed Reminder or Last Number Redial data, is cleared, and Remote Extension Dial Lock is turned on, restricting some calls. This can be useful to prevent the room extension from being used when no guest is checked in.

- **Cleaned-up**
  Switches the status of selected room extensions between Ready and Not Ready.

  When a guest checks out of a room, the room status becomes Checked-out and Not Ready. After the room has been cleaned, the status can be changed to Checked-out and Ready using this button. It is also possible to change the status back to Checked-out and Not Ready if necessary.

Room Status Control Mode
Pressing a Room Status Control button when the PT is idle allows the hotel operator extension to enter Room Status Control mode. When in Room Status Control mode, the corresponding Room Status Control button's light flashes red. The Room Status Control button that was pressed determines which room status each room extension can be switched to. For example, if the Check-in button was pressed, the Check-in button's light flashes red and the hotel operator can select which room extensions to check-in.
In addition, DSS buttons on the hotel operator's extension or a paired DSS Console show the room status of each extension as follows:

Light Pattern	Status
Off	Checked-out and Ready
Flashing Red	Checked-out and Not Ready
Red on	Checked-in

[Example Use: Checked-in Mode]

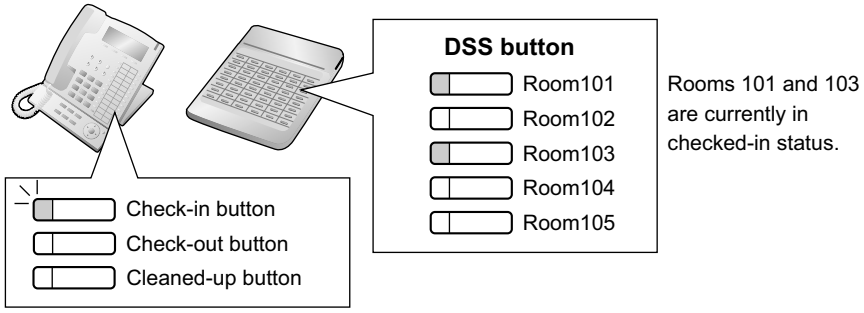

When in Room Status Control mode, the hotel operator's extension is treated as a busy extension, similar to when performing PT programming. Callers to that extension will hear a busy tone.
All other operations, including pressing other Room Status Control buttons, will be ignored. In addition, the lights of fixed and flexible buttons do not show their normal display pattern. In order to perform other operations, the hotel operator must exit Room Status Control mode.

Conditions

- SVM voice messages and messages left on the extension's Voice Mail (VM) will be cleared at Check-out.
- A maximum of four hotel operators can be assigned.
- Only one of each type of Room Status Control button can be assigned.
- Extensions associated with rooms must be one of the following types:
  PT (including IP-PT), SLT, T1-OPX
  PSs cannot be checked in and out as room extensions.
- When using extensions to represent guest rooms, it is recommended to set the extension number of a room extension is the same as the room number, for convenience.
- If enabled through system programming, check-in and check-out information is recorded by SMDR.

PC Programming Manual References

6.5 [4-1-4] Wired Extension—Flexible Button—◆ Type
6.18 [4-3] DSS Console—◆ Type
8.2 [6-2] Hotel—Main—◆ Hotel Operator—Extension 1–4

Feature Manual References

5.1.4 Extension Dial Lock
15.1.1 Redial, Last Number
16.1.4 SMDR (Station Message Detail Recording)
17.1.4 Timed Reminder

Operating Manual References

1.3.60 Room Status Control

Section 16

Features and Configurations—S

16.1 S

16.1.1 Self Labeling (KX-NT366/KX-NT560)

Description

For KX-NT366:
The KX-NT366 IP-PT features 12 flexible buttons, with an LCD screen next to the buttons. Each item can be named on the LCD screen through personal/system programming to reflect the function of its corresponding flexible button. Additionally, the flexible buttons can be organized into 4 "pages", allowing you to assign a total of 48 items to the 12 flexible buttons. You can toggle between pages by pressing the NEXT PAGE key, as follows:
Example: KX-NT366

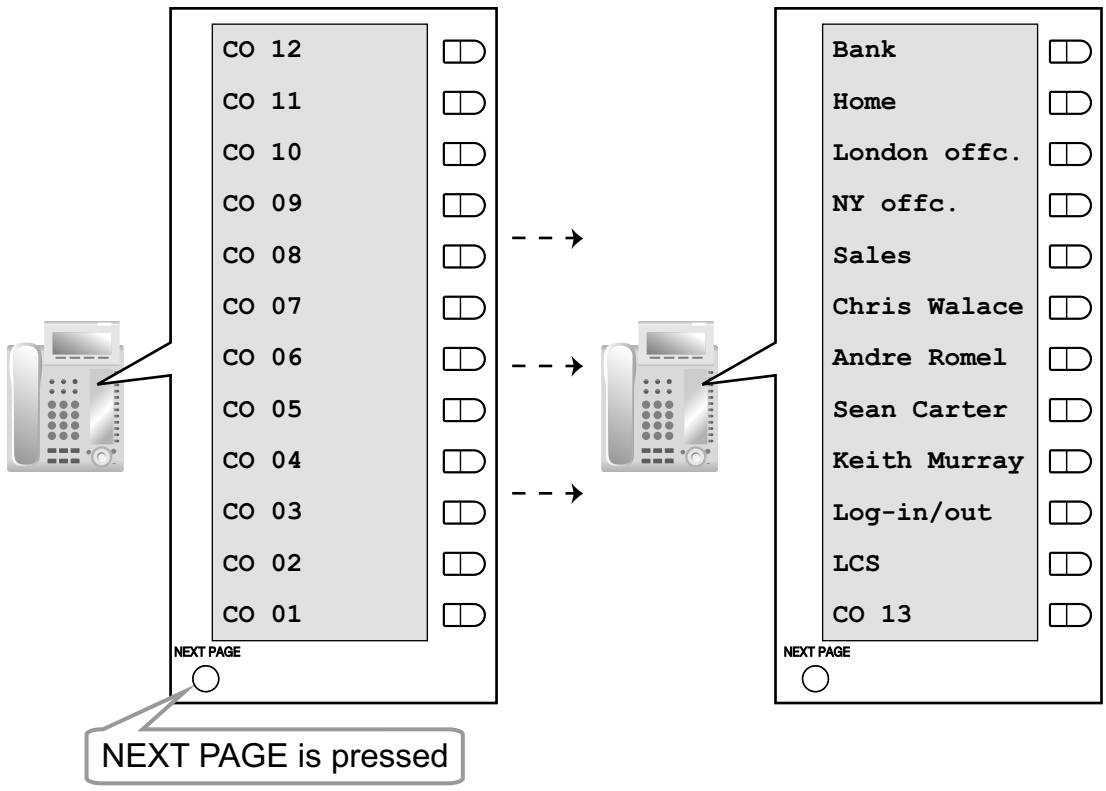

For KX-NT560:
The KX-NT560 IP-PT has 8 flexible buttons, and the telephone's display shows which feature, telephone number, or extension number is assigned to each button. You can press the Page key to display 3 other sets (pages) of 8 flexible button assignments. A different feature, telephone number, or extension number can be assigned to each button in each set. This means that 32 flexible buttons are available. You can toggle between pages by pressing the NEXT PAGE key.

Conditions

- Up to 12 characters can be assigned to the LCD of each flexible button through personal/system programming.
- When an incoming CO line call is answered or a CO line is seized, the corresponding CO button will turn Green and the LCD display will switch to the page that the corresponding CO button is registered in.

- It is not recommended to assign a System Alarm button when using this feature, because if an alarm occurs when the System Alarm button is not on the visible page, the alarm will not be noticed.

PC Programming Manual References

6.5 [4-1-4] Wired Extension—Flexible Button—◆ Label Name

Feature Manual References

6.1.3 Flexible Buttons

Operating Manual References

1.3.61 Self Labeling (KX-NT366/KX-NT560)

16.1.2 SIP (Session Initiation Protocol) Extension

Description

This PBX supports the connection of SIP supported IP telephones (hardphones and softphones). SIP extensions make and receive calls using Internet Protocol (IP).
For information about SIP extension compatibility with feature numbers, see 6.1.4 Flexible Numbering/Fixed Numbering.
Below are some of the features supported by SIP extensions:

– Account Code Entry (→ 1.1.2 Account Code Entry)
– Automatic Route Selection (ARS) (→ 1.1.3 ARS (Automatic Route Selection))
– Call Forwarding (FWD) (→ 6.1.6 FWD (Call Forwarding))
– Call Hold (→ 3.1.5 Call Hold)
– Call Transfer with Announcement (→ 3.1.11 Call Transfer)
– Conference*1 (→ 3.1.19 Conference)
– Direct Inward System Access (DISA) (→ 4.1.8 DISA (Direct Inward System Access))
– Doorphone Call (→ 4.1.12 Doorphone Call)
– Emergency Call (→ 5.1.2 Emergency Call)
– Idle Line Access (→ 3.1.17 CO Line Access)
– Operator Call (→ 12.1.5 Operator Features)
– Personal Speed Dialing (→ 16.1.7 Speed Dialing, Personal)
– Quick Dialing (→ 14.1.1 Quick Dialing)
– S-CO Line Access (→ 3.1.17 CO Line Access)
– System Speed Dialing (→ 16.1.8 Speed Dialing, System)
– TIE Line Call (→ 13.1.15 PRIVATE NETWORK FEATURES)
– Trunk Group Access (→ 3.1.17 CO Line Access)
– Verification Code Entry (→ 19.1.1 Verification Code Entry)

*1 As a member only (not as originator).

KX-HGT100 extensions support the following additional features:

– Message Waiting
– Personal Speed Dialing (Internal)
– Voice Mail
– Automatic Date and Time Adjustment
– Showing/preventing the telephone number when making outside calls
– SVM

– Call Transfer without Announcement

For details, refer to the Quick Reference Guide of the KX-HGT100.

SIP Video Phone

Video phone calls can be established between SIP extensions with video phone capabilities.

Conditions

[General]

- This PBX supports SIP devices that use RFC 3261, 3264, 3310, 2327, or 4028.
- Some SIP phones may not be compatible with this PBX.
- Before a SIP extension can be used with the PBX, the IP address of the MPR card, password, and extension number must be assigned on the SIP extension and on the PBX.
  For details on how to register, refer to the Information on IP Networking Guide.
- When registering the SIP extension, the user ID must be the extension number of the SIP extension.
- When a SIP extension uses the Call Hold feature, the target call is put on Consultation Hold.

[SIP Video Phone]

- When making a SIP video phone call, call features such as Call Transfer are not available.

Installation Manual References

KX-NCP500/KX-NCP1000

3.4.1 Virtual Cards

KX-TDE100/KX-TDE200

3.4.1 Virtual Cards

KX-TDE600

3.4.1 Virtual Cards

PC Programming Manual References

3.17 [1-1] Slot—Card Property - Virtual SIP Extension
3.18 [1-1] Slot—Port Property - Virtual SIP Extension Port
3.19 [1-1] Slot—Port Property - Virtual SIP Extension Port—Connection Command

16.1.3 SIP Refer Transfer

Description

If enabled through system programming, calls transferred to a SIP CO line will be transferred using the SIP service provider's Transfer feature instead of the PBX's.
The following types of transfer are available:

Attended Transfer	Transfer is completed after announcing the transferred party. From the extension user's perspective, this is the same as Call Transfer with Announcement (→ 3.1.11 Call Transfer).
Blind Transfer	Transfer is completed immediately after dialing the transfer destination's number. This is similar to Call Transfer without Announcement (→ 3.1.11 Call Transfer), except that the transferrer does not hear even a ringback tone; the transferred call is connected directly to the destination.

Conditions

[General]

- The availability of this feature depends on the SIP service provider.
- Since the SIP service provider takes control of the transfer, the transferred call cannot be returned to the PBX for further handling even if the transfer fails.

[Blind Transfer]

- SIP extensions cannot use this feature.
- This feature cannot be used when calling through DISA (→ 4.1.8 DISA (Direct Inward System Access)).

Installation Manual References

KX-NCP500/KX-NCP1000

3.4.1 Virtual Cards

KX-TDE100/KX-TDE200

3.4.1 Virtual Cards

KX-TDE600

3.4.1 Virtual Cards

Operating Manual References

1.3.11 Call Transfer—◆◆ Transferring to an Outside Party Using the SIP Service

Other References

Programming Manual for Virtual SIP CO Line Card

3.1.13 Supplementary Service
→Blind Transfer (REFER)
→Attended Transfer (REFER)

16.1.4 SMDR (Station Message Detail Recording)

Description

Automatically logs detailed information for each extension.

1. **SMDR Output Port**
   The following output methods can be selected through system programming:
   13.1 [11-1] Main—SMDR—◆ SMDR Format—Port

Output Method	Description
Serial Interface (RS-232C) port	SMDR information is sent to a connected PC, printer, etc.
Telnet compatible terminal emulator	SMDR information is sent to a Telnet compatible terminal emulator via LAN.

2. **SMDR Output Data**
   The following data can be recorded and sent to the SMDR output port:
   a. CO line call information (incoming/outgoing)
   b. Intercom call information (outgoing)

c. Log-in/Log-out information
d. PBX error log (→ 10.1.4 Local Alarm Information)
e. Hospitality feature information (→ 8.1.4 HOSPITALITY FEATURES)
f. Printing Message information (→ 13.1.13 Printing Message)

Memory for SMDR: A specified number of records (data) can be remembered by the PBX. When memory is full, the oldest data is overwritten by new data.
When an IPCMEC card is installed (KX-TDE series only), the number of SMDR records that can be stored will increase.

3. SMDR Format Type and Contents

The following three types of output format can be selected through system programming:

Pattern A: 80-column text without call charge information

Date (8 digits)	Time (7)	Ext (5)	CO (2)	Dial Number (25)	Ring (4)	Duration (8)	ACC Code (10)	CD (3)
01/02/02	10:03AM	1200	01	<I>12345678901234567890	5'15	00:00'00		NA
01/02/02	10:07AM	1200	01	<I>	0'05	00:01'05	9876543210	
01/02/02	10:15AM	1200	01	1234567890123456		00:01'05	9876543210	TR
01/02/02	10:30AM	*123	01	1234567890123456		00:01'05	9876543210	
01/02/02	01:07PM	1234	01	<I>ABC COMPANY12345678	0'05	00:01'05	9876543210	
01/02/02	01:07PM	1234	01	<D>CDE9876<I>Q COMPANY	0'05	00:01'05	9876543210	
01/02/02	01:07PM	1234	01	ABC COMPANY12345678		00:01'05		
01/02/02	01:07PM	1234	01	123.....		00:01'05		
01/02/02	01:07PM	1234	01	123456XX		00:12'05	98765	
01/02/02	08:33AM	1234		In the office				
01/02/02	01:07PM	1234		LOG IN				
01/02/02	03:35PM	1234		LOG OUT				
01/02/02	03:45PM	1234		EXT1235				
01/02/02	03:50PM	1234		Check in				
01/02/02	03:55PM	1234		Check out				
01/02/02	04:00PM	1234		Timed Reminder/Start				
01/02/02	04:01PM	1234		Timed Reminder/No Answer				
01/02/02	04:01PM	1234		Timed Reminder/Answer				
01/02/02	04:05PM	1234		<I>S003				RC
(1)	(2)	(3)	(4)	(5)	(6)	(7)	(8)	(9)

Pattern B: 80-column text with call charge information

Date (8 digits)	Time (7)	Ext (5)	CO (2)	Dial Number (20)	Duration (8)	Cost (8+2)	ACC Code (10)	CD (3)
01/02/02	10:03AM	1210	01	<I>				NA
01/02/02	10:07AM	2005	01	1234567890123456789	00:00'05	00560.00EU	9876543210	
(1)	(2)	(3)	(4)	(5)	(7)	(10)	(8)	(9)

120 column text

```
Date      Time      Ext   CO   Dial Number                          Ring  Duration  Cost          ACC Code  CD
(8 digits) (7)      (5)   (4)  (50)                                (4)   (8)       (8+3)         (10)      (3)
-----------------------------------------------------------------------------------------------------------------
01/02/02 10:03AM  1230  0001 123456789012345678901234567890          00:00'05  00560.00EUR  9876543210 TR
01/02/02 10:07AM  1230  0001 <I>ABC COMPANY123456789012345 0'05  00:00'05                  9876543210 TR
  :        :        :     :      :                                  :     :        :             :        :
 (1)      (2)      (3)   (4)    (5)                                (6)   (7)      (10)          (8)      (9)
```

[Explanation]

The following table explains the types of data logged by SMDR. Each description below refers to data indicated above by the numbers in the parentheses.

Number in the Pattern	Data	Description
(1)	**Date**	Shows the date of the call.
(2)	**Time**	Shows the end time of a call as hour/minute/AM or PM.
(3)	**Ext (Extension)**	Shows the extension number, floating extension number, etc., which was engaged in the call. Also shows the following codes: **Dxxx:** Outgoing CO line call from a doorphone (xxx=doorphone number) (→ 4.1.12 Doorphone Call) **Txxx:** Outgoing CO line call by TIE line service (xxx=trunk group number) ***xxx:** Verified call (xxx=verification code) (→ 19.1.1 Verification Code Entry)
(4)	**CO**	Shows the CO line number used for the call. For patterns A and B, "00" will be shown for CO line numbers over hundred.

Number in the Pattern	Data	Description
(5)	**Dial Number**	**[CO Line Call]** **Outgoing CO Line Call** Shows the dialed telephone number. Digits shown are as follows: **0 through 9,✳ , #** **P:** Pause **F:** External Feature Access (EFA) signal **=:** Host PBX Access code (→ 8.1.5 Host PBX Access Code (Access Code to the Telephone Company from a Host PBX)) **. (dot):** Secret dialing **–:** Transferred call If the transfer destination extension enters additional digits, those digits will be added after "–". **Incoming CO Line Call** Shows <I> + the caller's identification name/number. It is also possible to show the DID call information. In this case, <D> + DID name/number is added before <I>.
		[Outgoing Intercom Call] Shows the dialed extension number followed by "EXT".
		[Log-in/Log-out] Shows the Log-in or Log-out status.
		[Check-in/Check-out] Shows the check-in or check-out status. (→ 15.1.3 Room Status Control)
		[Timed Reminder] Shows the status of a timed reminder, either "Start", "No Answer", or "Answer". (→ 17.1.4 Timed Reminder)
		[Printing Message] Shows the selected message. (→ 13.1.13 Printing Message)
		[Sensor Call] Shows calls from an external sensor as follows: <I> S + sensor number. (→ 5.1.9 External Sensor)
(6)	**Ring**	Shows the ring duration before the call was answered in minutes/seconds.
(7)	**Duration**	Shows the duration of the CO line call in hours/minutes/seconds.
(8)	**Acc Code (Account Code)**	Shows the account code appended to the call. (→ 1.1.2 Account Code Entry)

Number in the Pattern	Data	Description
(9)	**CD (Condition Code)**	Shows other call information using the following codes: **TR:** Transfer **FW:** Call Forwarding (FWD) to CO line **D0:** Call using Direct Inward System Access (DISA) or TIE line service **RM:** Remote maintenance (modem) (→ 13.1.6 PC Programming) **NA:** Not answered call **RC:** Received call **AN:** Answered call **VR:** Received call with Call Waiting Caller ID (Visual Caller ID) **VA:** Answered call with Call Waiting Caller ID (Visual Caller ID)
(10)	**Cost**	Shows the call charge. This is not available if your telephone company does not provide a call charge reporting service.

The following data can be controlled through system programming to adjust whether (or how) they are printed or displayed by SMDR.

[Programmable Items]

Item	Description
Outgoing CO line call	Controls whether outgoing CO line calls are shown. This setting is common throughout the PBX. COS programming is also required. → 13.1 [11-1] Main—SMDR—◆ Print Information—Outgoing Call → [804] SMDR Outgoing Call Printing
Incoming CO line call	Controls whether incoming CO line calls are shown. → 13.1 [11-1] Main—SMDR—◆ Print Information—Incoming Call → [805] SMDR Incoming Call Printing
Outgoing intercom call	Controls whether outgoing intercom calls are recorded. → 13.1 [11-1] Main—SMDR—◆ Print Information—Intercom Call
Log-in/Log-out status	Controls whether the Log-in/Log-out status of extensions is recorded. → 13.1 [11-1] Main—SMDR—◆ Print Information—Log-in / Log-out
ARS dial	Controls whether the user-dialed number or the ARS-modified number is shown. The Host PBX Access code ("=" followed by the access code) can be shown (as supplementary information) only when the modified number is selected in this setting. (→ 1.1.3 ARS (Automatic Route Selection)) → 13.1 [11-1] Main—SMDR Options—◆ Option—ARS Dial

Item	Description
Caller's identification	Controls whether the caller's identification number, name, number and name, or nothing is shown. If "**none**" is selected, <I> will not be shown. → 13.1 [11-1] Main—SMDR Options—◆ Option—Caller ID Number & Name
DID number	Controls whether the DID numbers, names, numbers and names, or nothing is shown. If "**none**" is selected, <D> will not be shown. → 13.1 [11-1] Main—SMDR Options—◆ Option—DID Number & Name
Secret dialing	Controls the display of secret dialing, when ARS dial above, is set to show ARS-modified numbers. If enabled, numbers dialed secretly will be shown as dots. If ARS dial is set to show the user-dialed numbers, secretly dialed numbers are always shown as dots in SMDR, regardless of this setting. → 13.1 [11-1] Main—SMDR Options—◆ Option—Secret Dial
Date order	Controls the date format (MM-DD-YY, DD-MM-YY, YY-MM-DD, YY-DD-MM) → 13.1 [11-1] Main—SMDR—◆ SMDR Format—Date Format
Received call	Controls whether the time of receiving an incoming CO line call is shown. → 13.1 [11-1] Main—SMDR Options—◆ Option—Condition Code "RC/VR"
Answered call	Controls whether the time of answering an incoming CO line call is shown. → 13.1 [11-1] Main—SMDR Options—◆ Option—Condition Code "AN/VA"
Room status	Controls whether room status changes are shown. → 8.2 [6-2] Hotel—Main—◆ SMDR for External Hotel Application 1—Room Status Control
Timed Reminder call	Controls whether Timed Reminder calls are shown (→ 17.1.4 Timed Reminder). → 8.2 [6-2] Hotel—Main—◆ SMDR for External Hotel Application 1—Timed Reminder (Wake-up Call)
Printing Message	Specifies the messages that can be selected from an extension (→ 13.1.13 Printing Message). → 8.2 [6-2] Hotel—Main—◆ SMDR for External Hotel Application 2—Printing Message 1–8
Time format	Controls whether time is displayed in 12-hour or 24-hour format. → 13.1 [11-1] Main—SMDR—◆ SMDR Format—Time Format (12H / 24H)

Conditions

[General]

- **SMDR Format**
  The following SMDR format parameters can be set through system programming in order to match the paper size being used by the printer:
  a. Page Length: determines the number of lines per page.
  → 13.1 [11-1] Main—SMDR—◆ SMDR Format—Page Length (Number of Lines)
  → [802] SMDR Page Length
  b. Skip Perforation: determines the number of lines to be skipped at the end of every page.
  → 13.1 [11-1] Main—SMDR—◆ SMDR Format—Blank Footer Length (Number of Lines)
  → [803] SMDR Skip Perforation
  The page length should be at least four lines longer than the skip perforation length.

  Explanation:

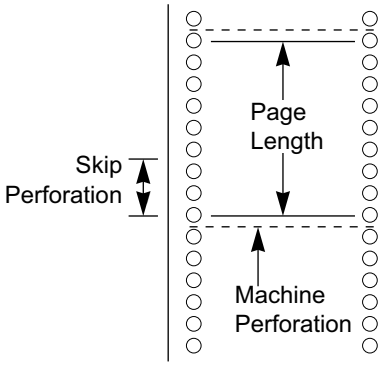

- SMDR data is not deleted even if the PBX is reset.
- If the PBX is reset during a conversation, the call will not be logged by SMDR.
- When a call is made from an extension to a number in the Emergency Dial Table (→ 5.1.2 Emergency Call), the PBX can be programmed to record the call information on SMDR both immediately after the number is dialed and after the call ends. (Normally, the PBX records the call information only after the call ends.)
  → 13.1 [11-1] Main—SMDR Options—◆ Emergency Call Notification
- The following calls are regarded as two separated calls in the SMDR:
  – Calls before and after the flash/recall/EFA signal is manually sent during a conversation
  – CO-to-CO line calls by Call Transfer, FWD or DISA (each is logged as both an "incoming call" and an "outgoing call")
- The PBX waits for a preprogrammed time period after the end of dialing before starting the SMDR timer for outgoing CO line calls. When the PBX has sent out all dialed digits to the telephone company and this timer expires, the PBX begins measuring the duration of the call. A display proprietary telephone (PT) shows the elapsed time of the call. The starting time and the total duration of the call are logged by SMDR.
  → 4.5 [2-3] Timers & Counters—Dial / IRNA / Recall / Tone—◆ Dial—Analog CO Call Duration Start
  → [208] Call Duration Count Starting Time for LCOT
- **Serial Interface (RS-232C) Parameters**
  The following communication parameters can be assigned for the Serial Interface (RS-232C port).
  a. New Line Code: Select the code appropriate for the PC or printer. If the PC or printer automatically feeds lines with carriage return, select "**CR.**" If not, select "**CR+LF.**"
  → 13.1 [11-1] Main—RS-232C—◆ Communication—NL Code
  → [800] RS-232C Parameter—New Line Code
  b. Baud Rate: Baud rate indicates the transmission speed of data from the PBX to the PC or printer.
  → 13.1 [11-1] Main—RS-232C—◆ Communication—Baud Rate
  → [800] RS-232C Parameter—Baud Rate

c. **Word Length:** Word length indicates how many bits compose each character.
→ 13.1 [11-1] Main—RS-232C—◆ Communication—Word Length
→ [800] RS-232C Parameter—Word Length

d. **Parity Bit:** Parity bit indicates what type of parity is used to detect errors in the string of bits composing a character. Make an appropriate selection depending on the requirements of the PC or printer.
→ 13.1 [11-1] Main—RS-232C—◆ Communication—Parity Bit
→ [800] RS-232C Parameter—Parity Bit

e. **Stop Bit Length:** Stop bit indicates the end of a bit string which composes a character. Select an appropriate value depending on the requirements of the PC or printer.
→ 13.1 [11-1] Main—RS-232C—◆ Communication—Stop Bit
→ [800] RS-232C Parameter—Stop Bit Length

- If a call is transferred to an ICD group using Automatic Transfer, the condition code "TR" will not be recorded on SMDR (→ 3.1.11 Call Transfer).

[Host PBX Access Code]

- The dialed number including the Host PBX Access code will be recorded on SMDR only if the modified number setting is selected in the ARS setting for SMDR.
- When a Host PBX Access code is assigned to a trunk group, calls to extensions of the host PBX are not recorded on SMDR.
- A Host PBX Access Code can be used to record only long distance calls on SMDR when a CO line port is connected directly to the telephone company (not a host PBX). This is allowed when the long distance code (e.g., "0") is assigned as the Host PBX Access code. All local calls (e.g., calls that do not require a "0" to be dialed first) are treated as extensions of the telephone company and do not get recorded on SMDR, because in this case this PBX recognizes the telephone company as the host PBX. Therefore, only long distance calls are recorded on SMDR.

[Output to a Telnet compatible Terminal Emulator]

- In order to activate a connection to a terminal emulator, the IP address of the MPR card, port number, user ID ("SMDR"), and password must be entered.
- If a terminal emulator user incorrectly enters the user ID or password 3 times consecutively, an alarm will be sent and connection will not be possible for 10 minutes.
- Through system programming, it is possible to assign the PBX port number and password.
- The terminal emulator application must be running constantly. If the application is terminated, call records that occur after the termination will be recorded in the PBX's memory. However, if the number of call records exceeds the PBX's capacity, older records will be deleted. Also, when the application restarts or is reconnected, duplicated call records may be output.

[Using SMDR with applications]

- SMDR data can also be monitored by applications such as Panasonic CA Call Accounting. For more information, see your application's documentation.

Installation Manual References

KX-NCP500/KX-NCP1000

3.10.1 Connection of Peripherals

KX-TDE100/KX-TDE200

3.3.3 IPCMEC Card (KX-TDE0105)
3.10.1 Connection of Peripherals

KX-TDE600

3.3.3 IPCMEC Card (KX-TDE0105)
3.12.1 Connection of Peripherals

PC Programming Manual References

4.5 [2-3] Timers & Counters—Dial / IRNA / Recall / Tone—◆ Dial—Analog CO Call Duration Start
4.12 [2-7-1] Class of Service—COS Settings—CO & SMDR—◆ Outgoing CO Call Printout (SMDR)
8.2 [6-2] Hotel—Main—◆ SMDR for External Hotel Application 2—Printing Message 1–8
13.1 [11-1] Main
→SMDR
→SMDR Options
→RS-232C—◆ Communication—Baud Rate
→RS-232C—◆ Communication—NL Code
→RS-232C—◆ Communication—Word Length
→RS-232C—◆ Communication—Parity Bit
→RS-232C—◆ Communication—Stop Bit

PT Programming Manual References

[800] RS-232C Parameter—New Line Code
[800] RS-232C Parameter—Baud Rate
[800] RS-232C Parameter—Word Length
[800] RS-232C Parameter—Parity Bit
[800] RS-232C Parameter—Stop Bit Length
[802] SMDR Page Length
[803] SMDR Skip Perforation
[804] SMDR Outgoing Call Printing
[805] SMDR Incoming Call Printing

Feature Manual References

3.1.11 Call Transfer
3.1.23 COS (Class of Service)
4.1.6 DID (Direct Inward Dialing)
4.1.8 DISA (Direct Inward System Access)
8.1.5 Host PBX Access Code (Access Code to the Telephone Company from a Host PBX)
9.1.3 ICD Group Features—Log-in/Log-out
13.1.15 PRIVATE NETWORK FEATURES
21.1 Capacity of System Resources

16.1.5 SNMP (Simple Network Management Protocol) System Monitor

Description

It is possible for a PC assigned as an SNMP manager to manage and receive PBX system status information, such as alarm information and general system activity using SNMP. Management Information Bases (MIBs) are sent to a PC (i.e., the SNMP manager) connected to the PBX over a LAN and can then be stored and analyzed using SNMP manager software.
The two features for managing information using SNMP are as follows:

– **Polling:**

A bilateral transaction of information. Polling allows the manager to request information from the PBX.

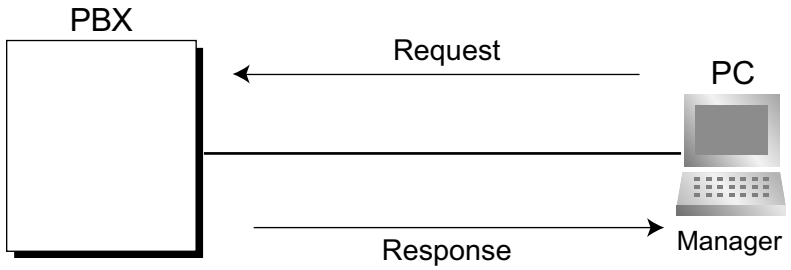

– **TRAP:**
An automatic relay of information from the PBX when a status change occurs or an alarm is detected.

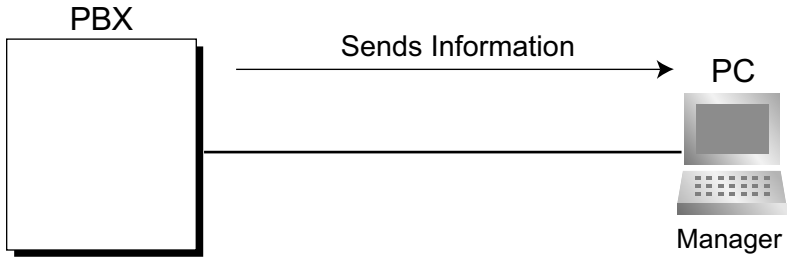

TRAP Implementation

The PBX will send the two types of TRAP as follows:

Type	TRAP Name	Description
Standard TRAP	coldStart	Information is sent after turning on the power of the PBX or resetting the PBX.
	Authentication Failure	Information is sent when an unregistered Community Name and/or Manager IP address is entered.
Enterprise Specific TRAP*1	Major Alarm	Information is sent when a major alarm is detected.
	Minor Alarm	Information is sent when a minor alarm is detected.

*1 Enterprise Specific TRAPs contain information exclusive to the PBX model (Enterprise Specific MIB).

Conditions

- Through system programming, it is possible to enable or disable this feature.
- Up to 2 SNMP managers can be assigned.
- This PBX supports SNMP Protocol Version 1.0 and SNMP Version 1.0-TRAP.
- This PBX can only receive read-only MIBs. Write MIBs are not supported.
- This PBX supports MIB II.
- For more information regarding major and minor alarms, refer to the Installation Manual.
- For a list of the MIB object groups supported by this PBX, refer to 21.3 Supported Management Information Base (MIB) Table in the Appendix.
- Through system programming, it is possible to select whether each type of TRAP (e.g., ColdStart) is sent to the SNMP manager or not.

Installation Manual References

KX-NCP500/KX-NCP1000

5.1.5 Troubleshooting by Error Log

KX-TDE100/KX-TDE200

5.1.5 Troubleshooting by Error Log

KX-TDE600

5.1.5 Troubleshooting by Error Log

PC Programming Manual References

13.4 [11-4-1] SNMP—System Setting
13.5 [11-4-2] SNMP—Manager

Feature Manual References

10.1.4 Local Alarm Information

16.1.6 Special Carrier Access Code

Description

If the PBX has access to multiple telephone companies, a Special Carrier Access code assigned through system programming is required every time a CO line call is made without using ARS.
A pause of a preprogrammed length will be automatically inserted between the user-dialed Special Carrier Access code and the subsequent digits. (→ 13.1.4 Pause Insertion)

Conditions

- **TRS**
  Toll Restriction (TRS) checks only the dialed telephone number excluding the Special Carrier Access code. (→ 17.1.6 TRS (Toll Restriction))
- **ARS**
  A pause is not automatically inserted between the user-dialed access code and the subsequent digits when ARS mode is enabled. (→ 1.1.3 ARS (Automatic Route Selection))
- **If this PBX is installed behind an existing host PBX:**
  A Special Carrier Access code and a Host PBX Access code should be assigned separately—these codes cannot be assigned together as one code. (→ 8.1.5 Host PBX Access Code (Access Code to the Telephone Company from a Host PBX))

PC Programming Manual References

9.3 [7-3] Special Carrier

PT Programming Manual References

[303] Special Carrier Access Code

Feature Manual References

1.1.3 ARS (Automatic Route Selection)
21.1 Capacity of System Resources

16.1.7 Speed Dialing, Personal

Description

An extension user can make calls using abbreviated dialing for frequently dialed numbers which are stored in the extension's Personal Speed Dialing.
Personal Speed Dialing is also known as Station Speed Dialing.

Conditions

- Any number, such as a telephone number or feature number, can be stored in Speed Dialing. A name can be assigned to each Personal Speed Dialing number through personal programming, and also to each System Speed Dialing number.
- **Call Directory—Speed Dialing**
  Display proprietary telephone (PT) users can make a call by selecting a stored name shown on the display.
- **Display Lock**
  An extension user can lock the Personal Speed Dialing number display to prevent the numbers from being viewed at any extension through personal programming (Display Lock). In this case, the Incoming/Outgoing Call Log displays and the SVM Log display are also locked, and the voice messages in the user's message box cannot be played back. An extension personal identification number (PIN) is required to use this feature. (→ 5.1.6 Extension PIN (Personal Identification Number))

PC Programming Manual References

4.9 [2-6-1] Numbering Plan—Main—Features
→◆ System Speed Dialing / Personal Speed Dialing
→◆ Personal Speed Dialing - Programming
6.4 [4-1-3] Wired Extension—Speed Dial

Feature Manual References

21.1 Capacity of System Resources

Operating Manual References

1.3.62 Speed Dialing, Personal
1.4.1 Call Log, Incoming
1.4.3 Directories
3.1.2 Personal Programming
3.3 System Programming

16.1.8 Speed Dialing, System

Description

An extension user can make calls using abbreviated dialing for frequently dialed numbers which are stored in the PBX as System Speed Dialing numbers.
Depending on system programming, the System Speed Dial items displayed on a display PT can be limited to items related to the extension's tenant.

Conditions

- Any number, such as a telephone number or feature number, can be stored in Speed Dialing. A name can be assigned to each Personal Speed Dialing number through personal programming, and also to each System Speed Dialing number.
- **Call Directory—Speed Dialing**
  Display proprietary telephone (PT) users can make a call by selecting a stored name shown on the display.
- **TRS Override by System Speed Dialing**
  It is possible to override Toll Restriction (TRS) when dialing a number using System Speed Dialing. (→ 17.1.6 TRS (Toll Restriction))
- **System Speed Dialing Display by AUTO DIAL/STORE Button**
  Pressing the AUTO DIAL/STORE button on a display DPT or KX-T7735 while on-hook can display the System Speed Dialing Directory.
- **Limiting the display by tenant—Call Directory**
  For Call Directory, an extension can reference the data for all tenants or for each tenant the extension is a member of, depending on system programming. In "Each Tenant" mode, Call Directory is displayed on display PTs as follows:

  - Only information about extensions that belong to the tenant is displayed.

- **Limiting the display by tenant—System Speed Dial**
  For System Speed Dial, an extension can reference the data for the system or for each tenant the extension is a member of, depending on system programming. In "Tenant Exclusive" mode, System Speed Dial is displayed on display PTs as follows:

  - Only information about extensions that belong to the tenant is displayed.
  - Changes to System Speed Dial settings only affect each tenant. They do not affect the whole system.

PC Programming Manual References

4.9 [2-6-1] Numbering Plan—Main—Features—◆ System Speed Dialing / Personal Speed Dialing
4.12 [2-7-1] Class of Service—COS Settings—TRS—◆ TRS Level for System Speed Dialing
6.4 [4-1-3] Wired Extension—Speed Dial
8.1 [6-1] System Speed Dial
8.6 [6-6] Tenant—◆ System Speed Dial
8.6 [6-6] Tenant—◆ Extension Directory

PT Programming Manual References

[001] System Speed Dialing Number
[002] System Speed Dialing Name
[509] TRS Level for System Speed Dialing

Feature Manual References

21.1 Capacity of System Resources

Operating Manual References

1.3.63 Speed Dialing, System
1.4.1 Call Log, Incoming
1.4.3 Directories
3.1.2 Personal Programming
3.3 System Programming

16.1.9 SVM (Simplified Voice Message)

Description

This feature provides simple answering machine features for extensions.
Features for an extension user with a message box:
An extension user can record a personal greeting message to greet a caller and ask him to leave a voice message. The user can also play back and clear greeting messages and the voice messages left by callers.
Feature for a caller:
A caller can leave a voice message after hearing the greeting message.

SVM/OGM Block on the MPR Card
The MPR card has a built-in SVM/OGM Block. This block can be used either for the SVM feature, for the OGM feature (→ 12.1.2 OGM (Outgoing Message)), or both. When used for the SVM feature, this block is assigned a floating extension number (default: 591). Two channels are available, allowing two users to access this feature at the same time.
When an extension is assigned to this feature through system programming, a message box is created for that extension. This message box is used to store greeting messages and voice messages for the extension. Each proprietary telephone (PT), single line telephone (SLT), and portable station (PS) can be assigned its own message box.

[Example]

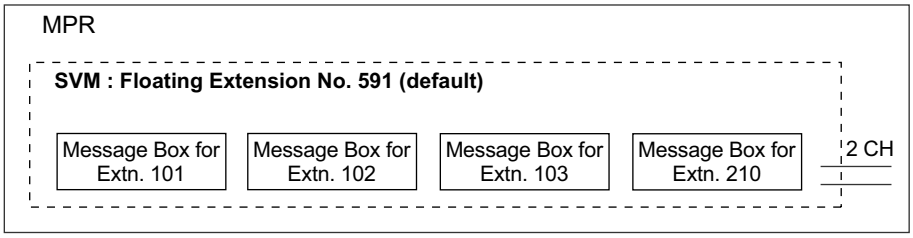

ESVM4 Card
Like the SVM/OGM block on the MPR card, an ESVM4 card, mounted on an OPB3 card, can be used either for the SVM feature, for the OGM feature, or both.
An ESVM4 card (4 channels) contains two blocks of data. Up to four ESVM4 cards (max. 16 channels) can be installed in the PBX.
Only up to 2 ESVM4 cards (max. 8 channels) can be used for the SVM feature per system. In this case, each card is assigned a floating extension number rather than the SVM/OGM block on the MPR card. The rest of the channels must be used for OGM feature purposes. For more information on using an ESVM card with an OPB3 card, refer to the Installation Manual.
When using an ESVM4 card for the SVM feature, it must be mounted on sub-slot 3 of the OPB3 card. For more information on using an ESVM4 card with an OPB3 card, refer to the Installation Manual.

[Example]

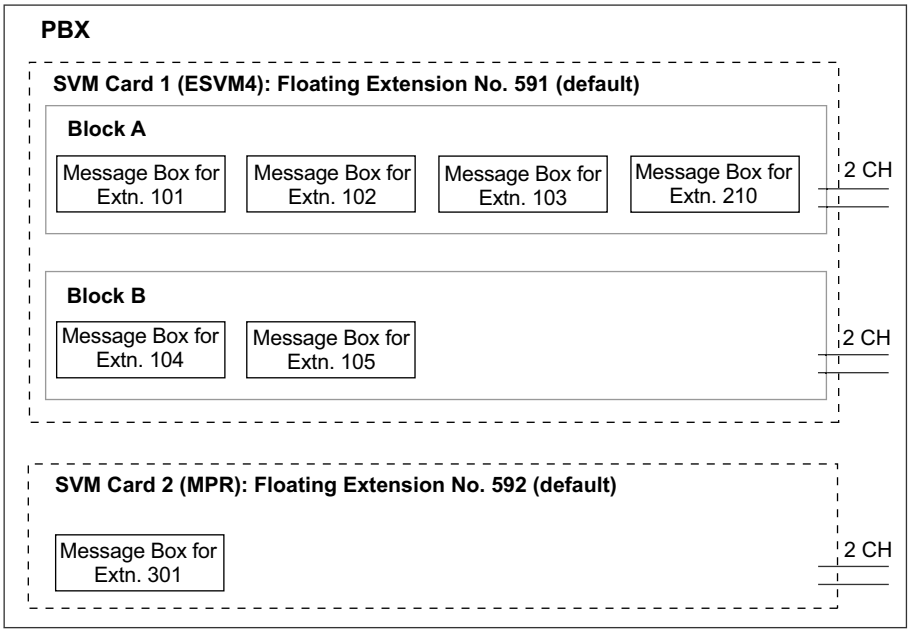

Message Recording Limit

Up to 125 (MPR)/250 (ESVM4) messages (greeting messages and voice messages for extensions) with a maximum total recording time of 60 minutes (default) can be recorded per card/block. This memory is shared between the message boxes of all extensions assigned to that card/block. The recording quality, which can be selected through system programming, determines the total recording time as follows:

Recording Quality	Recording Time with the MPR/ESVM4 Card
High	about 20 minutes
Middle (default)	about 60 minutes
Low	about 120 minutes

When a card/block is used for the OGM feature, the recording quality can be set separately (→12.1.2 OGM (Outgoing Message)

When using a card/block for both the SVM feature and OGM feature, the first 64 messages in the card/block are saved for OGM use and the remaining 186 messages will be for SVM use, as shown below:

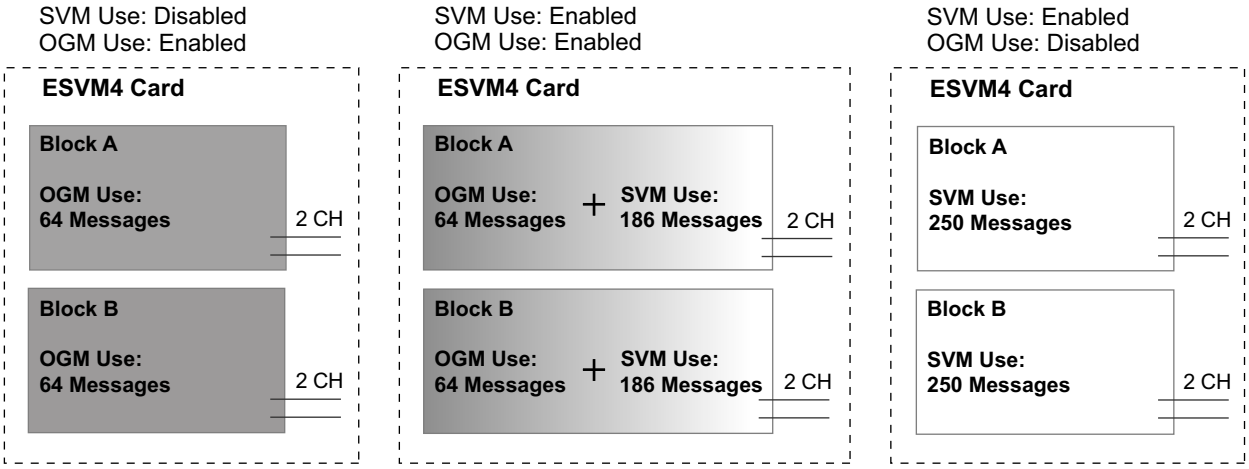

If the sum length of all recorded voice messages exceeds 90% of total recording space, the display informs all extension users that the total capacity has almost been reached. Users will hear dial tone 3 when going off-hook.

Floating Extension No. and Destination

An extension user can set incoming calls to be redirected to his message box when he cannot answer them. The user can set the floating extension number of this feature as the destination for redirected calls. Then, this feature answers redirected calls, plays back the relevant greeting message, and records a voice message. Incoming calls can be redirected to this feature by the following methods:

– Call Forwarding (FWD) (→ 6.1.6 FWD (Call Forwarding))
– Intercept Routing—No Answer/Busy/DND (→ 9.1.11 Intercept Routing)

[Programming Example for Intercept Routing]

Extension No.	Intercept Destination			
	Day	Lunch	Break	Night
101	102	**591**	**591**	**591**
102	103	**591**	**591**	**591**
301 (Operator)	–	**–**	**–**	**591**

In this example:

If a call is received at extension 101 and cannot be answered:

a. In day mode: the call will be redirected to extension 102.

b. In lunch/break/night mode: the call will be redirected to this feature card, and a voice message will be recorded to the message box.

If a call is received at extension 301 (operator), the call will only be redirected to this feature in night mode.

If both FWD and Intercept Routing features are set for an extension, the FWD setting has priority. So, for example, it is possible for extension 101 to temporarily set FWD settings from his extension to forward calls to the Simplified Voice Message (SVM) feature even during day mode.

Greeting Message for Each Time Mode

When a call is redirected to this feature, the caller hears the designated greeting message. In addition to the normal greeting message, an extension user can record a different greeting message for each time mode (day/lunch/break/night) (→ 17.1.5 Time Service).

[Recording Example]

- Normal Greeting Message: "You have reached John. I am sorry I cannot take your call right now. Please leave a message."
- Greeting Message for lunch mode: "You have reached John. I am sorry I am out for lunch right now. Please leave a message."

If both the greeting message for a certain time mode and the normal greeting message have been recorded, callers will hear the greeting message for that time mode. However, if no greeting message has been recorded for a certain time mode, the normal greeting message will be played instead.

If neither the normal greeting message nor the greeting message for a certain time mode have been recorded, incoming calls will not be redirected to this feature in that time mode. For example, if a greeting message has only been recorded for night mode, and no normal greeting message has been recorded, incoming calls can only be redirected to this feature in night mode. No incoming calls will be redirected to this feature in day/lunch/break mode.

Direct Recording

An extension user can leave a voice message directly in the message box of an extension. In this case, the target extension will not ring. It is also possible to transfer a caller directly to the message box of an extension.

Message Notification

If a new voice message has been left in a message box, and distinctive dial tones are enabled, the user will hear dial tone 4 when going off-hook. If a message box contains only voice messages that have previously been listened to, dial tone 2 is heard instead. In addition, if the user's telephone has a Message button or Message/Ringer Lamp, the corresponding button or lamp will light when a voice message has been left. Pressing the lit button while on-hook shows the caller's information.

SVM Log

When a caller leaves a voice message on the Simplified Voice Message (SVM) feature, the following information is also recorded (as available):

a. Caller's Name
b. Caller's Telephone Number
c. Time recording started
d. Voice Message Status
  – "New" is displayed for voice messages which have not previously been listened to.
  – "Old" is displayed for voice messages which have previously been listened to.

This information can be viewed with the display of a PT or PS.

Please note that the information shown on the display may vary depending on the information that was received and the type of telephone used. Only users of a 6-line display PT can view all of the above information.

Checking Voice Messages Left by Callers

When an extension user accesses his message box, the most recent unplayed voice message is played first. When one voice message finishes playing, the next most recent voice message will begin playing automatically. After the last voice message in a message box has finished playing, the voice messages will begin playing from the most recent voice message again. When all voice messages have been played this time, the extension user will hear dial tone 4, and the line will be disconnected automatically.

SVM Remote Access from CO Line

An extension user can remotely access his message box through a CO line by calling his own extension and using the Walking COS feature. This allows the user to, for example, check the voice messages left in his message box when he is out of the office.

Accessing the Message Box of Another Extension

An extension user can access the message box of another extension by using the Walking COS feature to, for example, record a greeting message in a message box for an Incoming Call Distribution (ICD) Group as described below.
In addition, if the user's telephone has a Message button for another extension, the user can easily access the message box of that extension and listen to the voice messages left by callers.

Message Box for Incoming Call Distribution (ICD) Group

When a call is redirected to this feature from an ICD Group using Intercept Routing—Overflow (→ 9.1.5 ICD Group Features—Overflow) or Call Forwarding (FWD), the greeting message for the first extension assigned to that ICD Group will be played, and the voice message from the caller will be recorded in that extension's message box.
A virtual PS can be assigned as the first extension of the ICD Group. This provides the ICD Group with a dedicated message box that is not shared with an actual extension. (→ 19.1.2 Virtual PS)

Conditions

[General]

- This feature will function using the preinstalled MPR card. To increase the capacity of the feature it is possible to add an ESVM4 card mounted on an OPB3 card.
- The maximum number of voice messages (not including greeting messages) that can be recorded for an extension can be set between 1 and 100 through system programming. (Default: 10)
- The Message button or Message/Ringer Lamp will light when an incoming call is answered by this feature. However, if a message is not left by the caller, the light will turn off when the call has ended.
- It is not possible to back up the SVM Log, recorded voice messages or greeting messages. If the PBX is initialized, all this information is cleared.
- When the ESVM card to which an extension belongs is changed through system programming, all the recorded voice messages and greeting messages for the extension will be cleared.
- When using the MPR card, this feature can be disabled for each extension through system programming. This can be useful for only allowing certain users (e.g., bosses, executives, etc.) access to the limited capacity of recorded voice messages for this feature. When this feature is disabled, all the recorded voice messages and greeting messages for the extension will be cleared.
- The voice messages for an extension will be cleared when the extension is checked out using the Hospitality feature (→ 8.1.4 HOSPITALITY FEATURES). However, greeting messages will not be cleared.
- An extension is able to receive calls even while a voice message is being recorded in that extension's message box.
- If an extension user tries to access this feature when it is already being accessed by two other users, the user will hear a busy tone.
- If an extension user tries to clear a voice message shown on the display while the message box is already in use, the extension user will hear a notification tone.
- Voice message recording will stop when:
  a. a caller hangs up.
  b. the recording time for the voice message reaches the preprogrammed limit. (Default: 120 seconds)
  c. the recording space reaches the limit.
  In cases b) and c), the caller will hear a notification tone, and the line will be disconnected.
- New voice messages cannot be recorded in a message box when:
  a. the total recording time or number of voice messages exceeds the limit.
  b. the number of voice messages for an extension exceeds the limit.
  c. the destination of a call has been changed more than once.
  d. the desired message box is already in use by another user.
  e. a call is received at an ICD Group, and the message box of the first extension assigned to that group is not available, or no extension is assigned as the first member of the group.

- This feature does not answer calls that are forwarded using the Call Forwarding by QSIG feature (→ 13.1.22 Private Network Features—QSIG—CF (Call Forwarding)).
- **Display Lock**
  A display PT user can lock the SVM Log display to prevent the user's information from being viewed and voice messages from being played back at any extension through personal programming (Display Lock). In this case, the Incoming/Outgoing Call Log displays and the Personal Speed Dialing number display are also locked. An extension personal identification number (PIN) (→ 5.1.6 Extension PIN (Personal Identification Number)) is required to lock/unlock the display.
- **Accessing the Message Box of Another Extension**
  Listening to voice messages left by callers using a Message button for another extension is available only when voice messages have been left in the message box.
- **Moving From SVM to DISA**
  When a call is answered by SVM but the caller wants to call another extension instead of leaving a message, it is possible to access DISA (DISA OGM 01 will be played) by dialing the Operator Call feature number. This allows the caller to call another extension via DISA or access the DISA AA service. The OGM feature for the card/block to which the SVM mailbox belongs must be enabled via system programming.

[Recording Greeting Messages]

- If an extension user tries to record a new greeting message to his message box when the total recording time or number of messages has reached its limit, the user will hear a reorder tone.
- It is not recommended to record music when creating a greeting message.

[SVM Remote Access from CO Line]

- Whether Walking COS is available or not can be set through system programming.
  If the PBX uses analog CO lines without the CPC service, it is strongly recommended to prohibit Walking COS access. If an extension user who is accessing his message box through an analog line goes on-hook while the voice messages are being played, the line will remain connected until all voice messages finish playing. This is because a reorder tone cannot be detected from an analog line while playing voice messages.
- The first digit of the Walking COS feature number must be entered before the greeting message finishes playing.
- When accessing SVM through a CO line, it is possible to change message boxes (e.g., to leave a message in another user's message box after listening to one's own messages). However, a user can only access the message boxes of other extensions assigned to the same card/block. For example, if the user accesses a message box belonging to card/block 1 first, then the user can only access the message boxes of other extensions belonging to card/block 1. If the user tries to access the message box of another extension belonging to a different card, the user will hear a reorder tone. While a reorder tone is heard, it is possible to retry another call by pressing "✳".

Installation Manual References

KX-NCP500/KX-NCP1000

3.3.1 IPCMPR Card
3.7.1 OPB3 Card (KX-NCP1190)
3.7.6 ESVM4 Card (KX-TDA0194)

KX-TDE100/KX-TDE200

3.3.1 IPCMPR Card
3.7.1 OPB3 Card (KX-TDA0190)
3.7.6 ESVM4 Card (KX-TDA0194)

KX-TDE600

3.3.1 IPCEMPR Card
3.9.1 OPB3 Card (KX-TDA0190)

3.9.5 ESVM4 Card (KX-TDA0194)

PC Programming Manual References

2.5.4 Tool—Simplified Voice Message—Delete All Recording
2.5.5 Tool—Simplified Voice Message—Check Current Usage
3.5 [1-1] Slot—OPB3 Card Property—◆ SVM Feature
3.44 [1-1] Slot—OPB3 Card Property—◆ SVM Feature
4.5 [2-3] Timers & Counters—Miscellaneous
→◆ SVM—Recording Time
→◆ SVM—Dial Tone Continuous Time
4.9 [2-6-1] Numbering Plan—Main—Features—◆ Simplified Voice Message Access
5.1 [3-1-1] Trunk Group—TRG Settings—Tone Detection
→◆ Simplified Voice Message Tone Detection—Silence
→◆ Simplified Voice Message Tone Detection—Continuous
→◆ Simplified Voice Message Tone Detection—Cyclic
6.1 [4-1-1] Wired Extension—Extension Settings—Option 6—◆ Display Lock / SVM Lock
6.9 [4-1-7] Wired Extension—Simplified Voice Message
6.10 [4-2-1] Portable Station—Extension Settings—Option 6—◆ SVM Lock
6.16 [4-2-5] Portable Station—Simplified Voice Message
7.5 [5-3-3] Voice Message—SVM

Feature Manual References

4.1.4 Dial Tone
12.1.2 OGM (Outgoing Message)
20.1.1 Walking COS
21.1 Capacity of System Resources

Operating Manual References

1.3.64 SVM (Simplified Voice Message)
3.1.2 Personal Programming

16.1.10 Syslog Record Management

Description

By connecting this PBX to a Syslog server over a LAN, it is possible to output local alarm information (major alarms/minor alarms) to a external PC.

Conditions

- To be able to use this feature, through system programming, it is required to enable this feature, register the IP address of the Syslog server, and to select whether major/minor are sent.

PC Programming Manual References

13.1 [11-1] Main—Syslog

Feature Manual References

10.1.4 Local Alarm Information

Section 17

Features and Configurations—T

17.1 T

17.1.1 T1 Line Service

Description

A T1 line carries twenty-four 64 kbps-voice channels at 1.5 Mbps, and can be used as a public or private line. Voice is digitized by Pulse Code Modulation (PCM).

1. **Channel Type**

   [LCOT/GCOT/DID/TIE/OPX]

   The T1 card supports five different channel types to provide connection at minimum expense. One of the five channel types can be assigned to any one of the T1 card's 24 channels individually, according to usage rates and customer needs.

2. **T1 Features**

   The following table shows the features available for each channel type:

Feature / Channel Type	(1) TIE	(2) DID	(3) DIL	(4) OPX	(5) ANI
LCOT			✔		
GCOT			✔		
DID		✔	✔		✔
TIE (E & M)	✔	✔	✔		✔
OPX				✔	

✔ Available

[Explanation]

	Feature	Description
(1) TIE	TIE Line Service	Refer to the TIE Line Service feature. (→ 13.1.15 PRIVATE NETWORK FEATURES)
(2) DID	Direct Inward Dialing (DID)	Refer to the DID feature. (→ 4.1.6 DID (Direct Inward Dialing))
(3) DIL	Direct In Line (DIL)	Refer to the DIL feature. (→ 4.1.7 DIL (Direct In Line))

	Feature	Description
(4) OPX	**Off Premise Extension (OPX)**	A single line telephone (SLT) which is installed off site can perform as if it were installed locally. The SLT makes and receives calls through the PBX. An extension number can be given to the OPX, and extension data such as Class of Service (COS) is also applied. **[Example]** 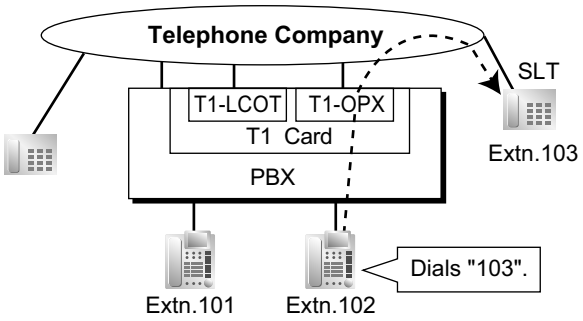
(5) ANI	**Automatic Number Identification (ANI)**	Receives the caller's number from a T1 line. When the ANI number is received, it can be treated the same as a Caller ID number. (→ 3.1.3 Caller ID)

Conditions

- If a T1 line is used as a public line, the channel type depends on the contract with the telephone company.

PC Programming Manual References

3.36 [1-1] Slot—Port Property - T1 Port
3.37 [1-1] Slot—Port Property - T1 Port—Connection Command

17.1.2 TAFAS (Trunk Answer From Any Station)

Description

A ring tone is sent through an external pager (loudspeaker) when an incoming call is received. Any extension user can answer the call.

Conditions

- **Hardware Requirement:** A user-supplied external pager
- **Floating Extension Number**
  A floating extension number can be assigned to an external pager (default: 600). An external pager is accessed by dialing its floating extension number.
- **Pager Volume**
  It is possible to change the volume level of an external pager through system programming.

Installation Manual References

KX-NCP500/KX-NCP1000

3.10 Connection of Peripherals

KX-TDE100/KX-TDE200

3.10 Connection of Peripherals

KX-TDE600

3.12.1 Connection of Peripherals

PC Programming Manual References

4.9 [2-6-1] Numbering Plan—Main—Features—◆ TAFAS Answer
4.20 [2-11-1] Audio Gain—Paging/MOH
→◆ Paging—EPG (External Pager) (for KX-NCP series)/EPG 1 (External Pager 1) (for KX-TDE series)
→◆ Paging—EPG 2 (External Pager 2) (KX-TDE series only)
7.2 [5-2] External Pager

PT Programming Manual References

[700] External Pager Floating Extension Number

Operating Manual References

1.3.65 TAFAS (Trunk Answer From Any Station)

17.1.3 Tenant Service

Description

Tenant service is a cost-effective method of providing PBX services to different offices or companies located in the same building, while using only one PBX.

1. **Tenant Configuration**

Tenant Members

Extensions are assigned to a tenant indirectly; they are assigned to extension user groups, and these extension user groups are assigned to tenants. An extension can belong to only one extension user group and an extension user group can belong to only one tenant, therefore an extension can belong to only one tenant. (→ 7.1.1 GROUP FEATURES)

Time Service

Time modes are used by many PBX features to determine how they will function during different times of day (→ 17.1.5 Time Service). The start and end times of each time mode (day/lunch/break/night) for each day of the week are programmed in a Time Table. Each Time Table has a number which corresponds to the tenant number of the tenant it serves. (Tenant 1 uses Time Table 1, etc.)

[Example of Tenant Configuration]

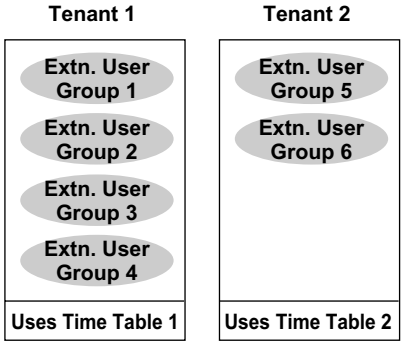

2. **System Management**
   Each of the following system management items can be assigned to each tenant.
   a. **Tenant Operator:** Determines the destination for calls directed to the tenant's operator. If no operator is designated, the PBX operator will serve as the tenant's operator (→ 12.1.5 Operator Features).
   → 8.6 [6-6] Tenant—◆ Operator (Extension Number)
   b. **ARS Mode:** Determines under which circumstances Automatic Route Selection (ARS) operates for calls made by the tenant's extensions — either when a call is made using the Idle Line Access method, or when any CO Line Access method is used (→ 3.1.17 CO Line Access). The ARS mode for each tenant can also be programmed to be the same ARS mode assigned to the entire PBX, or turned off (→ 1.1.3 ARS (Automatic Route Selection)).
   → 8.6 [6-6] Tenant—◆ ARS Mode
   c. **Audio Source for Music on Hold:** Determines the audio source for the Music on Hold heard by the tenant's callers. Either a tone or a specific background music (BGM) number can be used. The audio source for each tenant can also be programmed to use the same audio source used for Music on Hold assigned to the entire PBX (→ 11.1.4 Music on Hold).
   → 8.6 [6-6] Tenant—◆ Music On Hold
   d. **System Speed Dialing:** Determines whether each tenant uses the original set of common System Speed Dialing numbers or that tenant's private set (→ 16.1.8 Speed Dialing, System).
   → 8.6 [6-6] Tenant—◆ System Speed Dial
   Hardware Requirement: An EMEC or MEC card
   e. **PBX Extension Dialing Directory**
   (→ 16.1.7 Speed Dialing, Personal)
   → 8.6 [6-6] Tenant—◆ Extension Directory
3. **Call Blocking**
   Through Class of Service (COS) programming, it is possible to:
   1. Prevent extensions of one tenant from calling extensions of another tenant. (Tenant-to-Tenant Call Block)
   2. Limit the trunk groups which can be used by the extensions of each tenant. (External Call Block)

Tenant-to-Tenant Call Block

Using Internal Call Block, certain features, such as making intercom calls, can be restricted based on the COS assigned to extensions (→ 9.1.14 Internal Call Block). Well-planned COS programming can prevent extensions of one tenant from:

– Calling an extension or doorphone which belongs to another tenant
– Picking up calls ringing at extensions belonging to another tenant (→ 3.1.9 Call Pickup)
– Retrieving calls being held by another tenant (→ 3.1.5 Call Hold)

[Programming Example: Internal Call Block]

Caller	Called Party						
	COS 1	COS 2	COS 3	COS 4	COS 5	COS 6	
COS 1							
COS 2							
COS 3					Block	Block	
COS 4					Block	Block	
COS 5	Block	Block	Block	Block			
COS 6	Block	Block	Block	Block			

In this example:
Internal Call Block is employed to block calls between certain tenants.
Each extension in a tenant is assigned a COS that is not assigned to extensions which belong to another tenant.

a. Extensions in Tenant 1 are either COS 1 or 2. They can make calls to extensions in Tenants 1, 2, and 3.

b. Extensions in Tenant 2 are either COS 3 or 4. They can make calls to extensions in Tenants 1 and 2, but not 3.

c. Extensions in Tenant 3 are either COS 5 or 6. They can make calls to other extensions in Tenant 3 only.

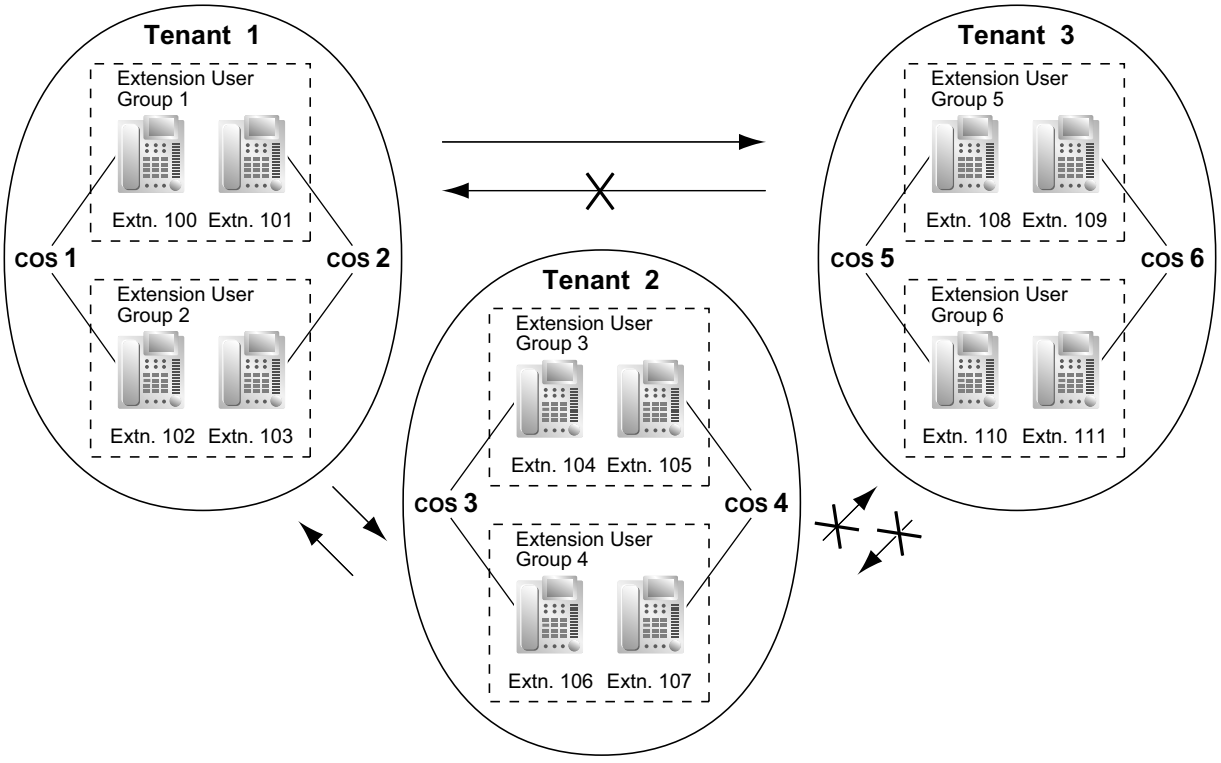

External Call Block

If multiple tenants are using the PBX, the External Call Block feature should be programmed to control which COS numbers are allowed to access which trunk groups. By preventing certain COS numbers from

accessing certain trunk groups, each tenant can be given its own trunk groups which no other tenant can access.

[Programming Example: External Call Block]

COS	Trunk Group 1	Trunk Group 2	Trunk Group 3	Trunk Group 4	Trunk Group 5	Trunk Group 6
COS 1			Block	Block	Block	Block
COS 2			Block	Block	Block	Block
COS 3	Block	Block			Block	Block
COS 4	Block	Block			Block	Block
COS 5	Block	Block	Block	Block		
COS 6	Block	Block	Block	Block		

In this example:

External Call Block is employed to prevent tenants from accessing all trunk groups except the ones designated to them. Each extension in a tenant is assigned a COS that is not assigned to extensions which belong to another tenant.

a. Extensions in Tenant 1 are either COS 1 or 2. They can access trunk groups 1 and 2.

b. Extensions in Tenant 2 are either COS 3 or 4. They can access trunk groups 3 and 4.

c. Extensions in Tenant 3 are either COS 5 or 6. They can access trunk groups 5 and 6.

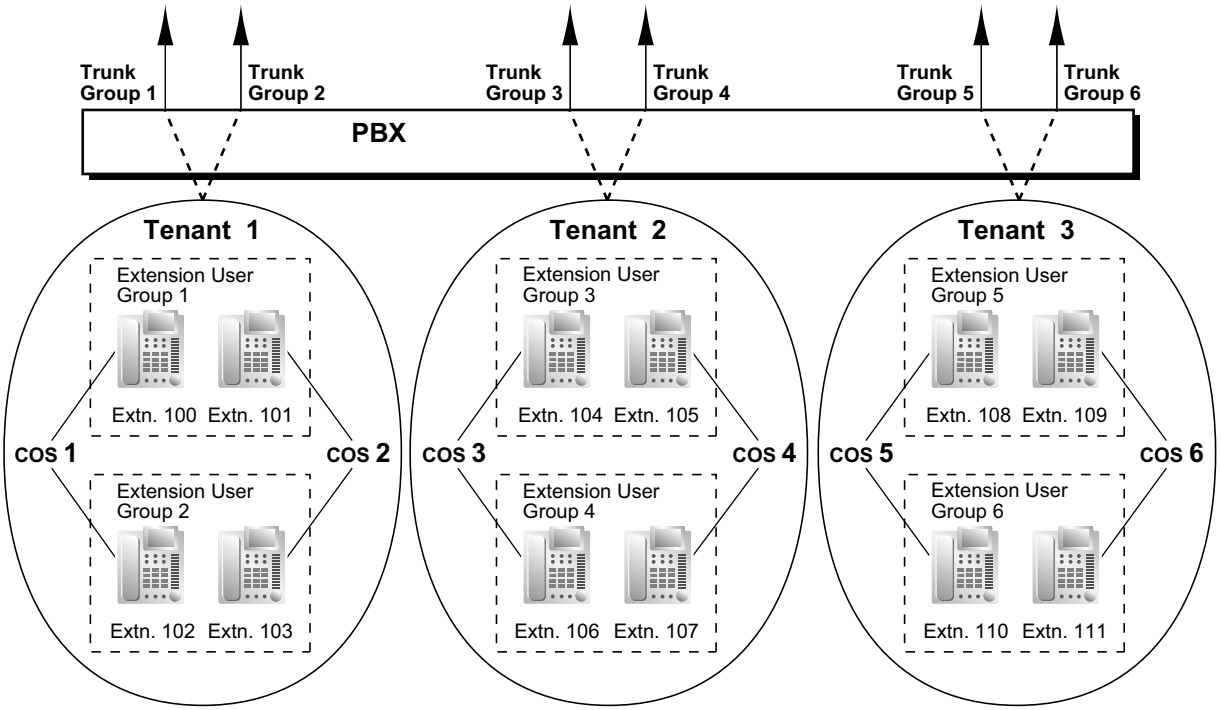

Conditions

- **ARS Assignment**
  When "**`On for Local Access Operation`**" or "**`On for Any CO Access Operation`**" is assigned as the ARS Mode for a tenant, only a subset of the ARS Leading Number Table is applied to that tenant's outgoing calls. Tenants 1 to 20 are assigned a range of 50 of the entries in the Leading Number Table as follows:
  – Tenant 1: Entries 1 to 50

– Tenant 2: Entries 51 to 100
– Tenant 3: Entries 101 to 150
:
– Tenant 20: Entries 951 to 1000

If "**Same as System Setting**" is selected, then all 1000 entries in the table will be applied to that tenant's outgoing calls. All 1000 entries in the table are applied to tenants 21 to 32 when ARS is enabled, regardless of the tenant's ARS Mode.
By dividing tenants, specific ARS settings can be applied to specific tenants according to the requirements of each tenant.
The following example illustrates how the ARS Leading Number Table is applied to tenants:

Tenant No.	ARS Mode	Applied ARS Entries
1	On for Local Access Operation	Entries 1 to 50
2	Off	Not applied
3	Same as System Setting (System Setting: On)	Entries 1 to 1000
4	On for Local Access Operation	Entries 151 to 200
5	Off	Not applied

- The following features used by incoming call distribution (ICD) group are determined by the tenant number assigned to them (→ 9.1.1 ICD GROUP FEATURES):
  – The Music on Hold heard by a caller while waiting in a queue.
  – The Time Table used by the ICD group to determine the current time mode. An overflow destination and Queuing Time Table can be assigned for each time mode.

PC Programming Manual References

4.4 [2-2] Operator & BGM
→◆ PBX Operator—Day, Lunch, Break, Night
→◆ BGM and Music on Hold—Music on Hold
4.6 [2-4] Week Table
4.8 [2-5] Holiday Table
4.13 [2-7-2] Class of Service—External Call Block
4.14 [2-7-3] Class of Service—Internal Call Block
5.6 [3-2] Extension Group
5.12 [3-5-1] Incoming Call Distribution Group—Group Settings—Main—◆ Tenant Number
6.1 [4-1-1] Wired Extension—Extension Settings—Main—◆ Extension Group
6.10 [4-2-1] Portable Station—Extension Settings—Main—◆ Extension Group
7.1 [5-1] Doorphone—◆ Tenant Number
7.7 [5-5] External Sensor—◆ Tenant No.
8.1 [6-1] System Speed Dial
8.6 [6-6] Tenant
Section 10 [8] ARS
10.6 [8-5] Carrier—Authorization Code for Tenant
12.2 [10-2] DIL Table & Port Settings—DIL—◆ Tenant Number
12.3 [10-3] DID Table—◆ Tenant Number

PT Programming Manual References

[001] System Speed Dialing Number

[006] Operator Assignment
[320] ARS Mode
[711] Music on Hold

Feature Manual References

1.1.3 ARS (Automatic Route Selection)
21.1 Capacity of System Resources

17.1.4 Timed Reminder

Description

An extension can be preset to ring at a certain time, to act as a wake-up call or reminder. This feature can be programmed to activate only once, or daily. If the user answers the alarm call, a prerecorded voice message will be heard. If a message is not assigned, a special dial tone (dial tone 3) will be heard.
Timed reminders can be set in one of two ways:

- By the extension user, from his or her own extension (Timed Reminder).
- Remotely, by the hotel operator (Remote Wake-up Call).

Conditions

- Be sure that the PBX clock is set to the correct time.
- Only one timed reminder can be set for an extension at a time. Setting a new reminder clears the previous reminder. If both the extension user and the hotel operator set a timed reminder for the same extension, the timed reminder that was set most recently is effective.
- **Programmable Time**
  The Alarm Ringing time, the number of alarm repeat times, and Interval time are programmable through system programming.
- **To use the voice message feature:**
  An extension assigned as a manager can record messages (→ 12.1.2 OGM (Outgoing Message)). A different message can be assigned for each time mode (→ 17.1.5 Time Service).

PC Programming Manual References

4.5 [2-3] Timers & Counters—DISA / Door / Reminder / U. Conf
→◆ Timed Reminder—Repeat Counter
→◆ Timed Reminder—Interval Time
→◆ Timed Reminder—Alarm Ringing Duration
4.9 [2-6-1] Numbering Plan—Main—Features
→◆ Remote Timed Reminder (Remote Wakeup Call)
→◆ Timed Reminder Set / Cancel
4.17 [2-8-3] Ring Tone Patterns—Call from Others—◆ Timed Reminder—Ring Tone Pattern Plan 1–8
4.18 [2-9] System Options—Option 1—◆ PT LCD—Time Display
7.3 [5-3-1] Voice Message—DISA System—Option 2—◆ Timed Reminder Message—Day, Lunch, Break, Night
8.2 [6-2] Hotel—◆ SMDR for External Hotel Application 1—Timed Reminder (Wake-up Call)

Feature Manual References

15.1.3 Room Status Control

Operating Manual References

1.3.66 Timed Reminder
1.3.73 Wake-up Call

17.1.5 Time Service

Description

This PBX supports day, night, lunch, and break modes of operation. TRS/Barring can be arranged separately. The destination of incoming calls can be set differently for each mode.

1. **Time Service Switching Mode**
   Day/lunch/break/night mode can be switched either automatically or manually. The switching mode can be assigned for each tenant.
   The switching mode can also be changed by pressing the Time Service Switching Mode (Automatic/Manual) button. This can be performed by only an extension assigned as the manager, or preprogrammed extension on a COS basis.

Type	Description
Automatic	The PBX will switch mode according to the preprogrammed Time Table.
Manual	A manager, or preprogrammed extension on a COS basis can switch mode by dialing the feature number or pressing the Time Service button.

   Even while in the Automatic Switching mode, day/lunch/break/night mode can be changed manually.
2. **Time Table**
   Each tenant has a Time Table used for the Automatic Switching mode. The Start and/or End time of each mode can be set for each day of the week. The Time Table numbers correspond to the tenant numbers respectively.

[Time Table Example]

Time Schedule		Time Table No. (Tenant No.)				
		1	2	3	4	…
MON	Day 1 start	08:00	11:00	08:00	08:00	…
	Lunch start	12:00	NONE	16:00	12:00	…
	Day 2 start	13:00	NONE	NONE	NONE	…
	Break 1 start	NONE	NONE	NONE	NONE	…
	Break 1 end (Day restart)	NONE	NONE	NONE	NONE	…
	Night start	16:00	20:00	12:00	NONE	…
TUE	Day 1 start	08:00	11:00	08:00	08:00	…
	Lunch start	12:05	NONE	13:00	13:00	…
	Day 2 start	13:00	NONE	NONE	NONE	…
	Break 1 start	NONE	NONE	NONE	NONE	…
	Break 1 end (Day restart)	NONE	NONE	NONE	NONE	…
	Night start	16:31	20:00	17:00	NONE	…
:	:	:	:	:	:	…

<Time Service Image of Monday>

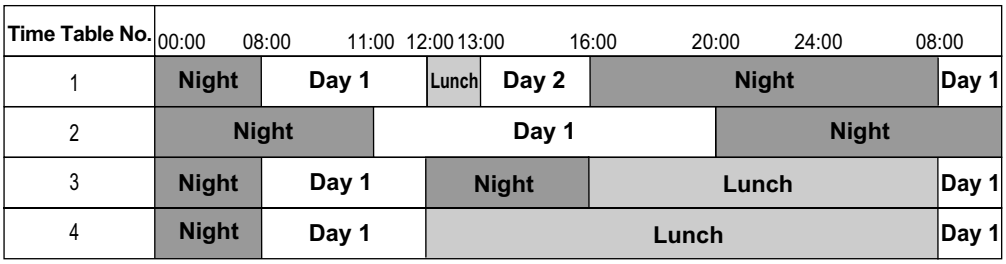

3. Features Using Time Service

The following features can be programmed separately for each time mode:

- **a.** Destination of incoming CO line calls (Direct In Line (DIL)/Direct Inward Dialing (DID)) (→ 4.1.7 DIL (Direct In Line), → 4.1.6 DID (Direct Inward Dialing))
- **b.** Destination of calls handled by Intercept Routing (→ 9.1.11 Intercept Routing)
- **c.** Destination of calls that are overflowed while waiting in a queue for an available agent of an incoming call distribution (ICD) group (→ 9.1.5 ICD Group Features—Overflow)
- **d.** Destination of incoming doorphone calls (→ 4.1.12 Doorphone Call)
- **e.** Destination of Operator Calls (→ 12.1.5 Operator Features)
- **f.** Toll Restriction (TRS) level of each COS
- **g.** COS numbers which are permitted/restricted to access certain trunk groups (External Call Block) (→ 3.1.17 CO Line Access)
- **h.** Outgoing Message (OGM) for Timed Reminder (→ 17.1.4 Timed Reminder)
- **i.** Queuing Time Table used by an ICD group (→ 9.1.6 ICD Group Features—Queuing)
- **j.** Intercept time for Intercept Routing—No Answer (→ 9.1.11 Intercept Routing)
- **k.** Intercept time for DISA Intercept Routing—No Answer (→ 4.1.8 DISA (Direct Inward System Access))

[Programming Examples of DID/DDI Table and DIL Table]

DID/DDI table can be programmed for each DID/DDI number, and a tenant (Time Table) number is assigned to each DID/DDI number. DIL table can be programmed for each trunk, and a tenant (Time Table) number is assigned to each trunk.

<DID/DDI Table>

Location	DID/DDI No.	Tenant (Time Table) No.	DID/DDI Destination			
			Day	Lunch	Break	Night
001	123-4567	1	105	100 (VPS)	105	100 (VPS)
002	123-2468	1	102	100 (VPS)	102	100 (VPS)
:	:	:	:	:	:	:

<DIL Table>

Trunk No.	Tenant (Time Table) No.	DIL Destination			
		Day	Lunch	Break	Night
01	1	101	100 (VPS)	101	100 (VPS)
02	2	102	100 (VPS)	102	100 (VPS)
:	:	:	:	:	:

Explanation:

If a trunk call with a DID number (123-4567) is received at 20:00;

1. Tenant (Time Table) number 1 will be used.
2. The call is received during night mode in Time Table 1.
3. The call will be routed to the extension 100 (VPS).

4. **Holiday Mode**
   The holiday mode activates automatically using the Automatic Switching mode. Up to 24 holidays (start and end dates) can be stored, and one time mode can be selected for all holidays.
5. **Time Service Button**
   A flexible button can be customized as the following buttons:
   a. Day/Night button
   b. Day/Night/Lunch button
   c. Day/Night/Break button
   d. Day/Night/Lunch/Break button

   Each of these buttons is used for switching between modes. For example, pressing the Day/Night button switches between day and night modes. All of these buttons show the current status as follows:

Light Pattern	Status
Off	Day mode
Red on	Night mode
Green on	Lunch mode
Slow green flashing	Break mode
Slow red flashing	Holiday mode

Note

Any extension user (except extension users allowed to change the mode) can only check the current status on the display by pressing the Time Service button.

Conditions

- PT programming can set the Start and/or End time of the following:
  - Day-1 (Day Start time)
  - Lunch (Lunch Start time)
  - Day-2 (Lunch End time)
  - Night (Night Start time)

  PC programming can also set the following three time periods for break mode per day.
  - Break-1 Start
  - Break-1 End (Day restart)
  - Break-2 Start
  - Break-2 End (Day restart)
  - Break-3 Start
  - Break-3 End (Day restart)
- **Time Service Switching Mode (Automatic/Manual) Button**
  A flexible button can be customized as the Time Service Switching Mode (Automatic/Manual) button.

PC Programming Manual References

4.6 [2-4] Week Table
4.8 [2-5] Holiday Table
4.9 [2-6-1] Numbering Plan—Main—Features—◆ Time Service (Day / Lunch / Break / Night) Switch
4.12 [2-7-1] Class of Service—COS Settings—Manager—◆ Time Service Switch
6.5 [4-1-4] Wired Extension—Flexible Button
→◆ Type
→◆ Parameter Selection (for Time Service)
→◆ Parameter Selection (for Time Service - Automatic/Manual)
→◆ Optional Parameter (Ringing Tone Type Number) (for Time Service)
6.13 [4-2-3] Portable Station—Flexible Button
→◆ Type
→◆ Parameter Selection (for Time Service)
→◆ Parameter Selection (for Time Service - Automatic/Manual)
→◆ Optional Parameter (or Ringing Tone Type Number) (for Time Service)
6.18 [4-3] DSS Console
→◆ Type
→◆ Parameter Selection (for Time Service)
→◆ Parameter Selection (for Time Service - Automatic/Manual)
→◆ Optional Parameter (Ringing Tone Type Number) (for Time Service)

PT Programming Manual References

[101] Time Service Switching Mode
[102] Time Service Starting Time
[514] Time Service Manual Switching

Feature Manual References

3.1.23 COS (Class of Service)
6.1.3 Flexible Buttons
17.1.3 Tenant Service
17.1.6 TRS (Toll Restriction)
21.1 Capacity of System Resources

Operating Manual References

1.3.67 Time Service
2.1.6 Time Service Mode Control

17.1.6 TRS (Toll Restriction)

Description

Toll Restriction (TRS) can prohibit extension users from making certain CO line calls, based on the Class of Service (COS) assigned to them.
→ 6.1 [4-1-1] Wired Extension—Extension Settings—Main—◆ COS
→ 6.10 [4-2-1] Portable Station—Extension Settings—Main—◆ COS
→ [602] Class of Service
Each COS is assigned a TRS level for each time mode; level 1 grants the highest level of authorization, allowing all CO line calls to be made, and level 7 grants the lowest level of authorization, prohibiting all CO line calls from being made. TRS levels 2 through 6 are used to restrict calls by combining preprogrammed Denied and Exception Code Tables, explained below.
Each COS can also have a separate TRS level applicable to calls made using System Speed Dialing.
A TRS check is applied each time a dialed number is sent to a CO line after an extension user goes off-hook and seizes a line.

[Flowchart]

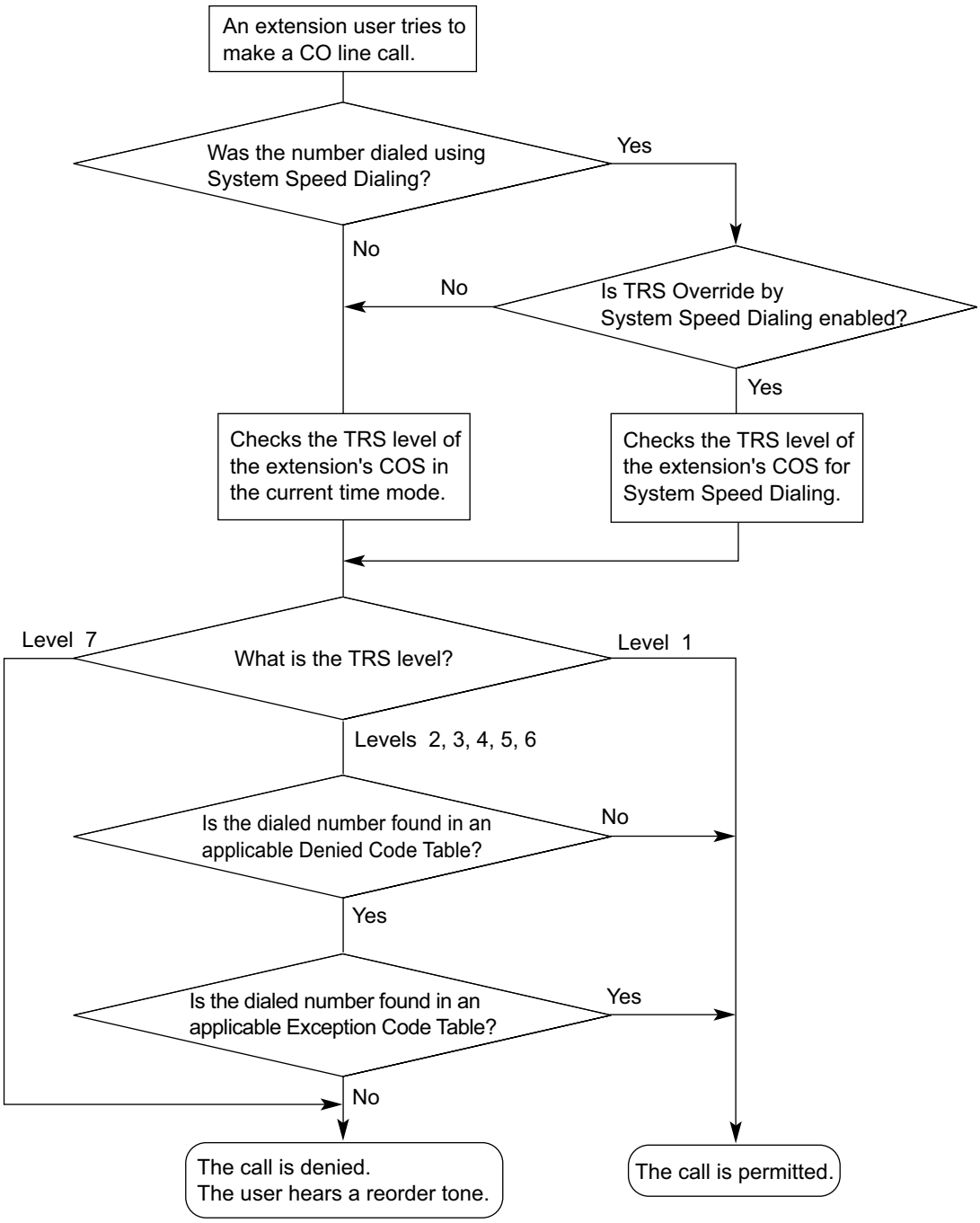

Denied Code Tables

Denied Code Tables are preprogrammed lists containing the first few digits (leading number) of telephone numbers which may not be called. All outgoing CO line calls made by TRS level 2 through 6 users are compared to at least one Denied Code Table, and when the leading number of a dialed telephone number (not including the CO Line Access number) matches an entry found in the applicable table, the call is denied.
There are five Denied Code Tables. Each table applies to a corresponding TRS level as well as the level(s) preceding it, as explained below.

Exception Code Tables

Exception Code Tables are preprogrammed lists of leading digits or complete telephone numbers which are checked against every dialed number prohibited by a Denied Code Table. When a user dials a number prohibited by a Denied Code Table, it is compared to at least one Exception Code Table. If the dialed number matches an entry found in the applicable Exception Code Table, the call is permitted.
There are five Exception Code Tables. Each table applies to a corresponding TRS level as well as the level(s) preceding it, as explained below.

TRS Override by System Speed Dialing

When TRS Override by System Speed Dialing is enabled for the PBX, each COS has an additional TRS level applicable only to calls made using System Speed Dialing.
→ 4.12 [2-7-1] Class of Service—COS Settings—TRS—◆ TRS Level for System Speed Dialing
→ [300] TRS Override by System Speed Dialing
This allows extension users to use System Speed Dialing to make CO line calls which are normally prohibited by the TRS level of their assigned COS. If, for example, a user's TRS level is 7, that user normally cannot make any CO line calls. However, if the same user's TRS level for System Speed Dialing is level 1, the user can make a CO line call to any number stored in System Speed Dialing.

TRS Level

The TRS level is determined by the telephone codes set in the Denied Code Tables and Exception Code Tables.
As shown in the table below, the Denied Code Tables for the higher levels are applied to all levels below it, and the Exception Code Tables for the lower levels are applied to all levels above it.

	Denied Code Tables[*1]	**Exception Code Tables**[*2]
Level 1	Not Programmable	Not Programmable
Level 2	Table for Level 2	Tables for Levels 2 through 6
Level 3	Tables for Levels 2 and 3	Tables for Levels 3 through 6
Level 4	Tables for Levels 2 through 4	Tables for Levels 4 through 6
Level 5	Tables for Levels 2 through 5	Tables for Levels 5 and 6
Level 6	Tables for Levels 2 through 6	Table for Level 6
Level 7	Not Programmable	Not Programmable

[*1] → 9.1 [7-1] Denied Code—◆ Denied Code Tables—Level 2–Level 6
→ [301] TRS Denied Code
[*2] → 9.2 [7-2] Exception Code—◆ Exception Code Tables—Level 2–Level 6
→ [302] TRS Exception Code

[Usage Example] Using this method, certain outgoing CO line calls (e.g., international/cellular phone/long distance) can be restricted as in the example below:

	Restricted	**Allowed**
Level 1	No restriction	
Level 2 (Boss)	• International Calls	• Countries where Clients are Located • Cellular Phone Calls • Long Distance Calls • Local Calls

	Restricted	Allowed
Level 3 (Secretary)	• International Calls • Cellular Phone Calls	• Boss's Cellular Phone • Long Distance Calls • Local Calls
Level 4 (Operator)	• International Calls • Cellular Phone Calls • Long Distance Calls	• Local Calls
:	:	:

In this example, a level 1 user can make any CO line calls. A level 2 user can make international calls to the countries where clients are located, and can also make cellular phone/long distance/local calls. A level 3 user cannot make international/cellular phone calls apart from to the boss's cellular phone, but can make long distance/local calls. A level 4 user cannot make any international/cellular phone/long distance calls, but can make local calls.

To set TRS as in the example above, it is necessary to program the Denied Code and Exception Code Tables as follows:

	Denied Code Tables		Exception Code Tables	
Level 1	Not Programmable		Not Programmable	
Level 2	011	Leading number to deny international calls	011xx	Leading number for countries to be allowed
Level 3	1123755	Leading number to deny cellular phone calls	1123755xxxx	Boss's cellular phone number
Level 4	1	Leading number to deny long distance calls	–	Not required
:	:		:	

[Programming Example: COS Settings]

COS	TRS Level*1				TRS Level for System Speed Dialing*2
	Day	Lunch	Break	Night	
1	1	1	1	6	1
2	2	2	2	6	1

*1 → 4.12 [2-7-1] Class of Service—COS Settings—TRS—◆ TRS Level—Day, Lunch, Break, Night
→ [501] TRS Level

*2 → 9.5 [7-5] Miscellaneous—◆ TRS Override by System Speed Dialing
→ [509] TRS Level for System Speed Dialing

TRS Settings for Each Level

Through system programming, it is possible to select a different method of TRS. With this method, each level has its own separate set of denied codes and exception codes, which are only applied to that level.
→ 9.5 [7-5] Miscellaneous—◆ TRS Table Mode for Level N (N=2_6)

	Denied Code Tables*1	Exception Code Tables*2
Level 1	Not Programmable	Not Programmable
Level 2	Table for Level 2	Table for Level 2
Level 3	Table for Level 3	Table for Level 3
Level 4	Table for Level 4	Table for Level 4
Level 5	Table for Level 5	Table for Level 5
Level 6	Table for Level 6	Table for Level 6
Level 7	Not Programmable	Not Programmable

*1 → 9.1 [7-1] Denied Code—◆ Denied Code Tables—Level 2–Level 6
→ [301] TRS Denied Code
*2 → 9.2 [7-2] Exception Code—◆ Exception Code Tables—Level 2–Level 6
→ [302] TRS Exception Code

[Usage Example] Using this method, it is possible to restrict certain CO line calls (e.g., international/cellular phone/long distance) on a department basis, as follows:

	Restricted	Allowed
Level 1	No restriction	
Level 2 (Engineering)	• International Calls	• Country where Factory is Located • Cellular Phone Calls • Long Distance Calls • Local Calls
Level 3 (Overseas Sales)	• Cellular Phone Calls	• Company Cellular Phone • International Calls • Long Distance Calls • Local Calls
Level 4 (Accounting)	• International Calls • Long Distance Calls	• Cities where Clients are Located • Cellular Phone Calls • Local Calls
:	:	:

In this example, a level 1 user can make any CO line calls. A level 2 user can only make international calls to the country where the factory is located, and can also make cellular phone/long distance/local calls. A level 3 user can only make cellular phone calls to the company cellular phone, and can also make any international/long distance/local calls. A level 4 user cannot make any international calls or most long distance calls, but can make long distance calls to cities where clients are located, cellular phone calls and local calls.

To set TRS as in the example above, it is necessary to program the Denied Code and Exception Code Tables as follows:

	Denied Code Tables	Exception Code Tables
Level 1	Not Programmable	Not Programmable

	Denied Code Tables		Exception Code Tables	
Level 2	011	Leading number to deny international calls	011xx	Leading number for country to be allowed
Level 3	1123755	Leading number to deny cellular phone calls	1123755xxxx	Number for cellular phones to be allowed
Level 4	011	Leading number to deny international and long distance calls	1315	Long distance numbers for states/cities to be allowed, and leading number of cellular phones
			1530	
	1		1123755	
:	:		:	

Conditions

CAUTION

The software contained in the TRS feature to allow user access to the network must be upgraded to recognize newly established network area codes and exchange codes as they are placed into service. Failure to upgrade the on-premise PBXs or peripheral equipment to recognize the new codes as they are established will restrict the customer and the users of the PBX from gaining access to the network and to these codes.
KEEP THE SOFTWARE UP TO DATE WITH THE LATEST DATA.

- TRS checks are performed for all calls made by:
  - Any CO line access (Idle Line Access, Trunk Group Access, S-CO Line Access)
  - Automatic Route Selection (ARS)
- The PBX can also be programmed to perform a TRS check for numbers that contain non-digits (✳ or #). By default, the PBX ignores ("No Check") any non-digits that are dialed, which is useful in preventing unauthorized calls which could possibly be made using certain telephone company exchanges.
  9.5 [7-5] Miscellaneous—◆ TRS Check for Dial "* #"
- TRS can also be programmed to check digits that are dialed after External Feature Access, such as when trying to transfer a call to an outside party. (→ 5.1.1 EFA (External Feature Access))
  9.5 [7-5] Miscellaneous—◆ TRS Check after EFA
- **Host PBX Access Code/Special Carrier Access Code**
  TRS checks can be carried out on telephone numbers dialed using a Host PBX Access code (→ 8.1.5 Host PBX Access Code (Access Code to the Telephone Company from a Host PBX)) or Special Carrier Access code (→ 16.1.6 Special Carrier Access Code).

Access Code Type	Access Code is stored in the PBX		Access Code is not stored in the PBX
	Access Code is dialed	Access Code is not dialed	
Host PBX Access Code	TRS ignores the code and checks the remaining digits.	Number dialed is not a CO line call, so TRS does not check the number.	TRS checks the entire number.
Special Carrier Access Code	TRS ignores the code and checks the remaining digits.	TRS checks the entire number.	TRS checks the entire number.

- **ARS**

If ARS is applied to a dialed number, TRS will check the user-dialed number, not the modified number produced by ARS. You do not need to program ARS-modified numbers in any of the TRS Tables. Additionally, when using ARS, TRS will ignore the Host PBX Access code or Special Carrier Access code.

- **Dialing Digit Restriction during Conversation**
  TRS can also limit the number of digits which may be dialed by an extension user while the user is engaged on a received CO line call. If the number of dialed digits exceeds the limit, the line will be disconnected.
  9.5 [7-5] Miscellaneous—◆ Dial Digits Limitation After Answering—Dial Digits
- It is possible to select through system programming whether the CO line is disconnected when the Inter-digit time expires without the TRS check being completed.
  9.5 [7-5] Miscellaneous—◆ Mode when Dial Time-out before TRS Check
  – If no disconnection is chosen, the TRS check will also be performed after the Inter-digit time expires.
  – If disconnection is chosen, the line will be disconnected when the CO line Inter-digit time expires. This also prevents EFA from being used.

  This setting applies to all CO lines.
- When one of the following features is used, the TRS level of the extension can be temporarily changed. If two or more of these features are used simultaneously (Dial Tone Transfer is used while the extension is locked, for example), the TRS level of the feature with the highest priority is applied for the duration of the call. The numbers below (1 through 4) indicate the priority of each feature, with 1 having the highest priority, and 4 having the lowest.
  1. Dial Tone Transfer (→ 4.1.5 Dial Tone Transfer)
  2. TRS Override by System Speed Dialing
  3. Verification Code Entry/Walking COS (→ 19.1.1 Verification Code Entry, → 20.1.1 Walking COS)
  4. Extension Dial Lock (→ 5.1.4 Extension Dial Lock)

PC Programming Manual References

4.12 [2-7-1] Class of Service—COS Settings—TRS
→◆ TRS Level—Day, Lunch, Break, Night
→◆ TRS Level for System Speed Dialing
6.1 [4-1-1] Wired Extension—Extension Settings—Main—◆ COS
6.5 [4-1-4] Wired Extension—Flexible Button
→◆ Type
→◆ Parameter Selection (for TRS Level Change)
6.10 [4-2-1] Portable Station—Extension Settings—Main—◆ COS
6.13 [4-2-3] Portable Station—Flexible Button
→◆ Type
→◆ Parameter Selection (for TRS Level Change)
6.18 [4-3] DSS Console
→◆ Type
→◆ Parameter Selection (for TRS Level Change)
9.1 [7-1] Denied Code
9.2 [7-2] Exception Code
9.3 [7-3] Special Carrier
9.5 [7-5] Miscellaneous

PT Programming Manual References

[300] TRS Override by System Speed Dialing
[301] TRS Denied Code
[302] TRS Exception Code
[501] TRS Level
[509] TRS Level for System Speed Dialing
[602] Class of Service

Feature Manual References

1.1.3 ARS (Automatic Route Selection)
3.1.17 CO Line Access
3.1.23 COS (Class of Service)
16.1.8 Speed Dialing, System
17.1.5 Time Service
21.1 Capacity of System Resources

Section 18

Features and Configurations—U

18.1 U

18.1.1 Upgrading the Software

Description

It is possible to upload software from a PC to the PBX to upgrade the following:

Data File	Storing Area
Main Processing (MPR) software data	Operating system data area on MPR card.
Default system programming data for each country/area	Country/area data area on the MPR card.
Language data for PT display	Each language data area on the MPR card. There are two types: **Type 1:** Proprietary Telephone (PT) display except for PT system programming (→ 13.1.32 PT Programming) (five languages max.) **Type 2:** PT system programming data (one language max.)
LPR (software on a slot card) software data	Flash ROM on the appropriate optional services card (e.g., DHLC, DLC, T1, PRI, etc.)
Cell Station (CS) software data	Flash ROM on the CS

Conditions

- The software version of the MPR card can be confirmed through system programming.

Installation Manual References

KX-NCP500/KX-NCP1000

3.3.1 IPCMPR Card

KX-TDE100/KX-TDE200

3.3.1 IPCMPR Card

KX-TDE600

3.3.1 IPCEMPR Card

PC Programming Manual References

3.2 [1-1] Slot—Summary

PT Programming Manual References

[190] Main Processing (MPR) Software Version Reference

Section 19

Features and Configurations—V

19.1 V

19.1.1 Verification Code Entry

Description

An extension user can enter a verification code when calling from his own or any other extension, to change the Toll Restriction (TRS) level (→ 17.1.6 TRS (Toll Restriction)) or to identify the call for accounting and billing purposes. A verification code personal identification number (PIN) is required to use this feature.

Conditions

CAUTION

There is a risk that fraudulent telephone calls will be made if a third party discovers a personal identification number (PIN) (verification code PIN or extension PIN) of the PBX. The cost of such calls will be billed to the owner/renter of the PBX. To protect the PBX from this kind of fraudulent use, we strongly recommend:

a. Keeping PINs secret.

b. Selecting complex, random PINs that cannot be easily guessed.

c. Changing PINs regularly.

- When a CO line call is made using Verification Code Entry:
  - the Class of Service of the specified extension is applied (→ 3.1.23 COS (Class of Service))
  - the Itemized Billing code of the specified extension is applied (→ 1.1.3 ARS (Automatic Route Selection))
  - ✳ + verification code is recorded on SMDR as the call originator, instead of the extension number of the actual extension used (→ 16.1.4 SMDR (Station Message Detail Recording)).
- **Verification Code Entry through DISA**
  This feature is also available through DISA. (→ 4.1.8 DISA (Direct Inward System Access))
- **Verification Code PIN**
  A verification code PIN must be assigned for each verification code through system programming or through manager programming.
- **Verification Code PIN Lock**
  If the wrong PIN is entered three times, the line will be disconnected. If the wrong PIN is entered a preprogrammed number of times successively, the PIN for the verification code will be locked. Only an extension assigned as the manager can unlock it. In this case, the PIN will be unlocked and cleared.

[Example of Verification Codes and Their Programming]

Location	Code*1	Name*2	PIN*3	COS*4	Itemized Billing Code for ARS*5
0001	1111	Tom Smith	1234	1	2323
0002	2222	John White	9876543210	3	4545
:	:	:	:	:	:

*1 → 8.3 [6-3] Verification Code—◆ Verification Code
→ [120] Verification Code

*2 → 8.3 [6-3] Verification Code—◆ User Name
→ [121] Verification Code Name

*3 → 8.3 [6-3] Verification Code—◆ Verification Code PIN
→ [122] Verification Code Personal Identification Number (PIN)

*4 → 8.3 [6-3] Verification Code—◆ COS Number

→ [123] Verification Code COS Number
*5 → 8.3 [6-3] Verification Code—◆ Itemized Billing Code for ARS

PC Programming Manual References

4.5 [2-3] Timers & Counters—Miscellaneous—◆ Extension PIN—Lock Counter
4.9 [2-6-1] Numbering Plan—Main—Features—◆ User Remote Operation / Walking COS / Verification Code
6.1 [4-1-1] Wired Extension—Extension Settings—Option 1—◆ ARS Itemized Code/2nd CLIP (10 digits)
6.10 [4-2-1] Portable Station—Extension Settings—Option 1—◆ ARS Itemized Code/2nd CLIP (10 digits)
8.3 [6-3] Verification Code

PT Programming Manual References

[120] Verification Code
[121] Verification Code Name
[122] Verification Code Personal Identification Number (PIN)
[123] Verification Code COS Number

Feature Manual References

1.1.3 ARS (Automatic Route Selection)
3.1.23 COS (Class of Service)
11.1.1 Manager Features
21.1 Capacity of System Resources

Operating Manual References

1.3.68 Verification Code Entry
3.2.2 Manager Programming

19.1.2 Virtual PS

Description

An extension number can be assigned for a portable station (PS) without registering the PS unit itself. This is known as temporary registration. If a forward destination is then assigned for this PS, all calls to that extension number will be forwarded to the assigned destination. Using this setting to forward calls to outside destinations or destinations at another PBX allows those destinations to receive calls as if they were within the PBX. In addition, depending on system programming, the forward destination can use some of the features of the PBX. This can be especially useful for a cellular phone user, who can use his cellular phone as if it were his extension when he is away from his desk.

[Example]

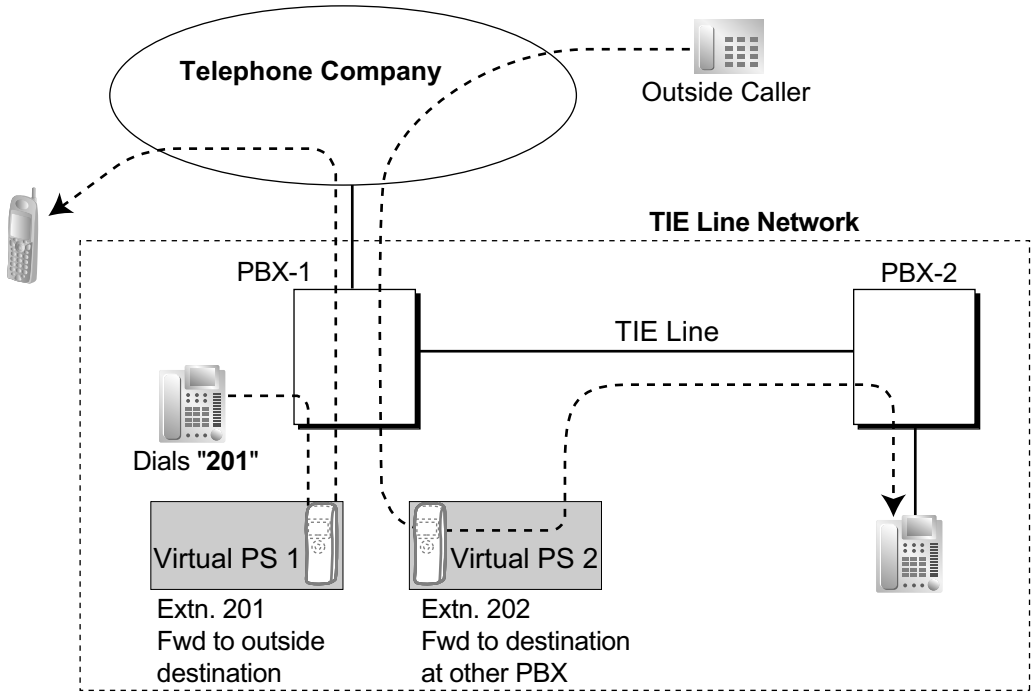

The following features can be accessed using this method:

Feature	Description & Reference
Outside Destinations in Incoming Call Distribution Group	A virtual PS allows calls to an Incoming Call Distribution (ICD) Group to be answered by outside destinations or extensions at another PBX. → 9.1.4 ICD Group Features—Outside Destinations
Network ICD Group	Using virtual PSs in an ICD Group, up to 4 other PBXs can be called at the same time. → 13.1.18 Private Network Features—Network ICD Group
PS Roaming by Network ICD Group	One PS can be registered at up to 4 PBXs. Using virtual PSs in an ICD Group, all 4 PBXs can be called simultaneously to search for the PS. → 13.1.19 Private Network Features—PS Roaming by Network ICD Group
Automatic Fax Transfer	A virtual PS can be used to forward fax calls to a fax machine at another PBX connected by a TIE line. → 1.1.6 Automatic Fax Transfer
Simplified Voice Message	Registering a virtual PS as the first extension of an ICD Group provides the ICD Group with a dedicated message box that is not shared with an actual extension. → 16.1.9 SVM (Simplified Voice Message)

Conditions

- To use this feature, call forwarding to CO lines must be enabled through COS programming.

PC Programming Manual References

3.47 [1-2] Portable Station—PS Registration and De-registration

PT Programming Manual References

[690] PS Registration

Feature Manual References

6.1.6 FWD (Call Forwarding)

19.1.3 Voice Mail (VM) Group

Description

A VPS can be connected to extension ports of the PBX. The extension ports make a group, called a VM group. This group has a floating extension number. The VM group can be the destination for redirected calls and incoming calls. When receiving a call, the VPS can greet the caller offering them the option to leave a message or dial a number to reach the desired party. The VPS can record the message for each extension and leave notification on the corresponding extension, if the called extension is not able to answer calls.

1. VM Group Type

Type	Description
VM (DTMF) Group	A group of SLT ports which use the Voice Mail DTMF Integration features. A maximum of 2 (for KX-NCP500/KX-NCP1000/ KX-TDE100/KX-TDE200) or 8 (for KX-TDE600) groups can be assigned.
VM (DPT) Group	A group of DPT ports which use the Voice Mail DPT (Digital) Integration features. • A maximum of 2 (for KX-NCP500/KX-NCP1000/ KX-TDE100/KX-TDE200) or 8 (for KX-TDE600) KX-TVS/KX-TVP systems can be connected to the PBX. • A maximum of one VM (DPT) group per KX-TVS/ KX-TVP can be assigned. • A maximum of 12 ports (24 channels) of the VPS can form each group.

[Example]

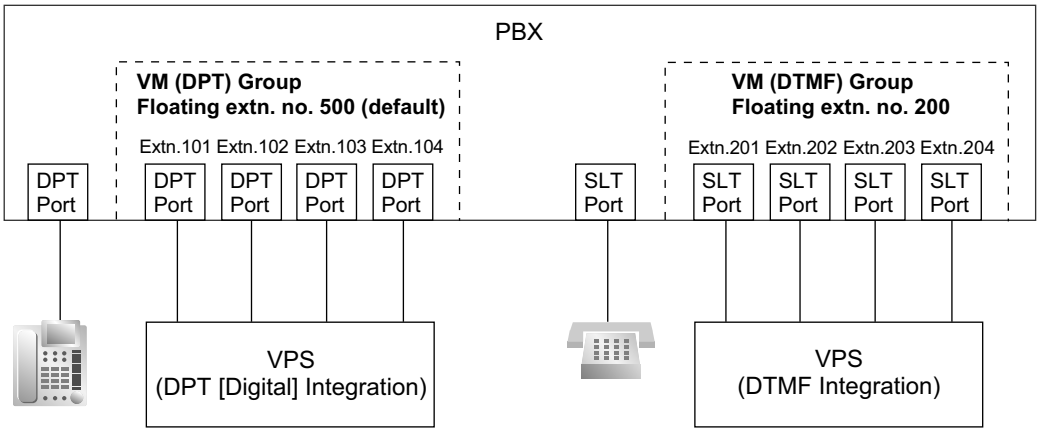

VM (DTMF) Group Assignment:

The VPS is connected to the SLT ports of the PBX. These SLT ports, as well as VM (DTMF) Group settings, must be configured to allow DTMF Integration, as shown in the following [Programming Example of Extension Port] and [Programming Example of VM (DTMF) Group].

VM (DPT) Group Assignment:

The VPS is connected to the DPT ports of the PBX. These DPT ports, as well as VM (DPT) group settings, must be configured to allow DPT (Digital) Integration, as shown in the following [Programming Example of Extension Port] and [Programming Example of VM (DPT) Group].

[Programming Example of Extension Port]

Slot	Port	Port Type	Extn. No.	DPT Property			
				Type*1	Unit No. of VPS*2	Port No. of VPS*3	
3	1	DPT	101	VM (DPT)	1	1	VM (DPT) Group 1
3	2	DPT	102	VM (DPT)	1	2	
4	1	S-Hybrid	201	VM (DPT)	2	1	VM (DPT) Group 2
4	2	S-Hybrid	202	VM (DPT)	2	2	
5	1	SLT	301	Not assignable	Not assignable	Not assignable	VM (DTMF) Group 1
5	2	SLT	302	Not assignable	Not assignable	Not assignable	
6	1	SLT	401	Not assignable	Not assignable	Not assignable	VM (DTMF) Group 2
6	2	SLT	402	Not assignable	Not assignable	Not assignable	

*1 → 3.24 [1-1] Slot—Port Property - Extension Port—◆ DPT Type—Type
→ [601] Terminal Device Assignment

*2 → 3.24 [1-1] Slot—Port Property - Extension Port—◆ DPT Type—VM Unit No.

*3 → 3.24 [1-1] Slot—Port Property - Extension Port—◆ DPT Type—VM Port No.

[Programming Example of VM (DTMF) Group]

VM (DTMF) Group No.	Floating Extension No.	Group Name	Service Mode	Extension No. of Port Connected to VPS Port			
				1	2	3	
1	300	Company C	AA	301	302	303	
2	400	Company D	VM	401	402	403	

→ 5.22 [3-8-2] VM(DTMF) Group—Group Settings

[Programming Example of VM (DPT) Group]

VM (DPT) Group No.	Floating Extension No.*1	Group Name*2
1	500	Company A
2	200	Company B

*1 → 5.19 [3-7-2] VM(DPT) Group—Unit Settings—◆ Floating Extension No.
→ [660] VM Group Floating Extension Number
*2 → 5.19 [3-7-2] VM(DPT) Group—Unit Settings—◆ Group Name

2. Incoming Calls to VM Group

When incoming calls are received at the floating extension number of the VM group, calls will hunt starting at the lowest VM port number. In this case, the FWD and DND settings (→ 4.1.10 DND (Do Not Disturb), → 6.1.6 FWD (Call Forwarding)) for each extension port are disregarded.

It is programmable whether the calls queue when all extension ports in the group are busy through system programming. If the queuing is disabled through system programming, the call will be redirected to the destination, assigned on the trunk group which receives the call, by the Intercept Routing feature.

Conditions

- It is possible to call an extension (extension port) in a VM group directly. If the calls are routed directly to the extension in the group, it is possible to enable some features (e.g., FWD, Idle Extension Hunting) on the extension in the group.
  The Voice Mail DTMF/DPT (Digital) Integration (e.g., command transmit) is also available on the extension.
- **One-touch Voice Mail Feature Access**
  It is possible to assign a One-touch Dialing button for direct access to a Voice Mail feature. (→ 12.1.4 One-touch Dialing) For example, to access a mailbox (mailbox number 123) of the VPS (extension number 165) directly, assign "**165**#6**123**" to a One-touch Dialing button. When pressing this button, the outgoing message (OGM) of the mailbox will be heard.
- All ports in a VM (DPT) group must be connected to a single DHLC or DLC card.

PC Programming Manual References

3.24 [1-1] Slot—Port Property - Extension Port
→◆ DPT Type—Type
→◆ DPT Type—VM Unit No.
→◆ DPT Type—VM Port No.
5.18 [3-7-1] VM(DPT) Group—System Settings
5.19 [3-7-2] VM(DPT) Group—Unit Settings
5.21 [3-8-1] VM(DTMF) Group—System Settings
5.22 [3-8-2] VM(DTMF) Group—Group Settings

PT Programming Manual References

[601] Terminal Device Assignment
[660] VM Group Floating Extension Number

Feature Manual References

19.1.4 Voice Mail DPT (Digital) Integration
19.1.5 Voice Mail DTMF Integration
21.1 Capacity of System Resources

19.1.4 Voice Mail DPT (Digital) Integration

Description

A Panasonic VPS that supports DPT (Digital) Integration (e.g., the KX-TVP200) can be connected to this PBX in a tightly integrated fashion.
DPT (Digital) Integration features can be used when the VPS is connected through DPT ports of the PBX.

Feature Explanation

1. **Automatic Configuration—Quick Setup**
   The PBX informs the VPS of its extension numbers and the floating extension numbers of the incoming call distribution groups so that the VPS can create mailboxes with this data automatically.
2. **FWD to a Mailbox of the VPS**
   If an extension user sets FWD to the VPS, incoming calls are forwarded to the VPS. (→ 6.1.6 FWD (Call Forwarding)) The PBX sends a mailbox number of the forwarding extension to the VPS. Therefore the caller can leave a message in the mailbox of the extension without knowing the mailbox number.
3. **Intercept Routing to a Mailbox of the VPS**
   If an extension user sets Intercept Routing to the VPS, the intercepted CO line calls will be redirected to the VPS (→ 9.1.11 Intercept Routing). If the "**Intercept to Mailbox for Call to Extension**" setting is enabled through system programming, the PBX sends the mailbox number of the intercepted extension to the VPS.
   If the VPS is set as the overflow destination of an Incoming Call Distribution (ICD) Group and the "**Overflow to Mailbox for Call to ICD Group**" setting is enabled through system programming, the PBX sends the mailbox number of the ICD group to the VPS.
   Therefore the caller can leave a message in the mailbox of the extension without knowing the mailbox number.
   If either of these settings is disabled, calls of the corresponding type are handled by the Trunk Service (e.g., Automated Attendant) in the VPS.
   → 5.18 [3-7-1] VM(DPT) Group—System Settings—◆ Intercept to Mailbox for Call to Extension
   → 5.18 [3-7-1] VM(DPT) Group—System Settings—◆ Overflow to Mailbox for Call to ICD Group
4. **Voice Mail (VM) Transfer Button**
   An extension user can transfer a call to a mailbox of an extension by pressing the VM Transfer button and entering the number of the extension. The transferred caller can then leave a message in the mailbox. The VM Transfer button can also be used by extension users at other times, as follows:
   a. By pressing the VM Transfer button when the extension is idle, the extension's mailbox is called and Voice Mail messages can be listened to. This feature can be used even if the Message Waiting lamp is not on.
   b. Pressing the VM Transfer button while a call is incoming will redirect the call to the called extension's mailbox. This is useful when the called extension user does not want to answer the call.
   c. If you call an extension, and the other party does not answer, pressing the VM Transfer button will transfer your call to the called extension's mailbox so that you can leave a message. This feature can also be used when the called extension is busy or set to DND.

5. **Transfer Recall to a Mailbox of the VPS**
   If a call is transferred to an extension via the Automated Attendant (AA) service of the VPS and the call is not answered within a preprogrammed Transfer Recall time, the PBX sends the mailbox number of the transfer destination extension to the VPS. Therefore the caller can leave a message in the mailbox of the extension without knowing the mailbox number. The "**`Transfer Recall to Mailbox`**" setting should be enabled through system programming to use this feature.
   4.5 [2-3] Timers & Counters—Dial / IRNA / Recall / Tone—◆ Recall—Transfer Recall
   5.18 [3-7-1] VM(DPT) Group—System Settings—◆ Transfer Recall to Mailbox
   → [201] Transfer Recall Time
6. **Listening to a Recorded Message (Direct Mailbox Access)**
   If the VPS receives a message, the VPS will set the Message Waiting feature (e.g., turning on the Message button light, and showing the number of messages waiting on the display of a 6-line display PT) on the corresponding telephone as notification. (→ 11.1.3 Message Waiting) Thereby, the VPS notifies the extension user that there is a message waiting in his mailbox. When the Message button light turns on, pressing the button allows the extension user to play back the messages stored in his mailbox without dialing such as a mailbox.
   When the extension user dials an extension number of the VM (DPT) extension port or the floating extension number of the VM (DPT) group from his extension, he can listen to the messages stored in his mailbox without dialing his mailbox number (Direct Mailbox Access). It is possible to disable this feature by COS programming on the VPS.
7. **VPS CO Line Service & Automatic Time Mode Notification for Incoming Call**[*1]
   Multiple tenants can share a single VPS; each tenant does not require a dedicated VPS port. If the destination of the incoming CO line call is a VM (DPT) group, the PBX sends the VM trunk group number and time mode (day/lunch/break/night) of the tenant (→ 17.1.5 Time Service) assigned for the call to the VPS. Therefore the VPS can send the assigned message (company greeting) to the caller. Corresponding VM trunk group number and tenant number are determined by the setting of the incoming CO line call as follows:
   a. **DIL/TIE:** the setting of each CO line port (→ 4.1.7 DIL (Direct In Line), → 13.1.15 PRIVATE NETWORK FEATURES)
      12.2 [10-2] DIL Table & Port Settings—DIL
      → ◆ Tenant Number
      → ◆ VM Trunk Group No.
   b. **DID:** the setting of each location number for DID (→ 4.1.6 DID (Direct Inward Dialing))
      12.3 [10-3] DID Table
      → ◆ Tenant Number
      → ◆ VM Trunk Group No.

[Example]

For DIL Calls:

Each location number can have its VM trunk group number (message number) and tenant number.

[DIL Programming Example]

Port No. (CO Line No.)	DIL Destination				VM Trunk Group No.	Tenant No.
	Day	Lunch	Break	Night		
01	105	100	105	100	1	1
02	102	100	102	100	2	2
:	:	:	:	:	:	:

[VPS Programming—Programming Example of Trunk Group Assignment]

Trunk Group No.		Company Greeting No.	Incoming Call Service	. .
1	Day	1	Custom Service 11	. .
	Lunch	2	Custom Service 29	. .
	Break	3	Custom Service 31	. .
	Night	4	Custom Service 12	. .
2	Day	5	Custom Service 21	. .
	Lunch	6	Custom Service 15	. .
	Break	7	Custom Service 42	. .
	Night	8	Custom Service 30	. .
:	:	:	:	. .

Explanation:

A CO line call handled by DIL distribution reaches a VM (DPT) group directly or by the Intercept Routing feature. According to the [DIL Programming Example] and [VPS Programming—Programming Example of Trunk Group Assignment], a caller will hear a corresponding company greeting of the VPS.
Time mode (day/lunch/break/night) of the preprogrammed tenant is applied to the DIL destination and company greeting number.

[Example]

For DID Calls:

Each location number can have its VM trunk group number (message number) and tenant number.

[DID Programming Example]

Location No.	DID No.	DID Destination				DID Name	VM Trunk Group No.	Tenant No.
		Day	Lunch	Break	Night			
0001	123-4567	105	100	105	100	John White	1	1
0002	123-2468	102	100	102	100	Tom Smith	2	3
:	:	:	:	:	:	:	:	:

[VPS Programming—Programming Example of Trunk Group Assignment]

Trunk Group No.		Company Greeting No.	Incoming Call Service	. .
1	Day	1	Custom Service 11	. .
	Lunch	2	Custom Service 29	. .
	Break	3	Custom Service 31	. .
	Night	4	Custom Service 12	. .
2	Day	5	Custom Service 21	. .
	Lunch	6	Custom Service 15	. .
	Break	7	Custom Service 42	. .
	Night	8	Custom Service 30	. .
:	:	:	:	. .

Explanation:

A DID call reaches a VM (DPT) group directly or by the Intercept Routing feature. According to the [DID Programming Example] and [VPS Programming—Programming Example of Trunk Group Assignment], a caller will hear a corresponding company greeting of the VPS.

Time mode (day/lunch/break/night) of the preprogrammed tenant is applied to the DID destination and company greeting number.

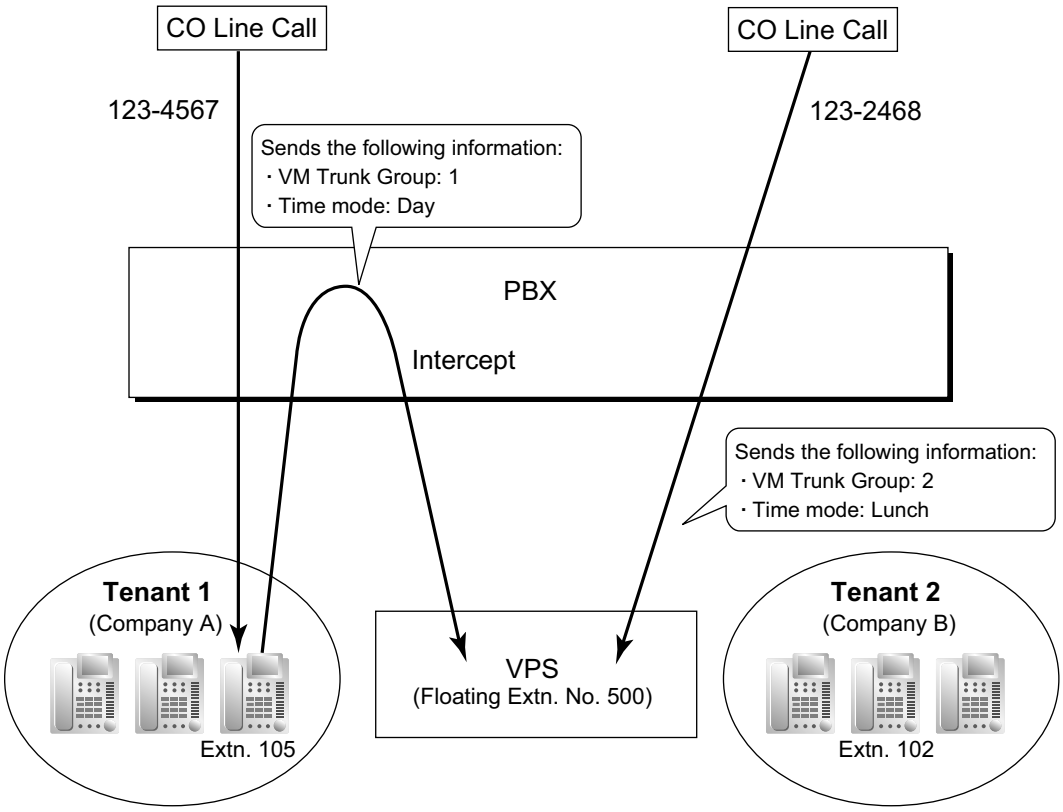

8. **Caller's Identification Notification to the VPS**
   When receiving a CO line call, the PBX sends the caller's identification number/name to the VPS.
9. **DID Number Notification to the VPS**
   When receiving a CO line call with a DID number, the PBX sends the DID number to the VPS. The number will be sent to the VPS even if the call reaches the VPS after redirection by, for example, the Intercept Routing feature.
10. **Status Notification to the VPS**
    After the call is redirected by the VPS, the PBX sends the status of the redirected extension (e.g., busy) to the VPS.
11. **Paging by the VPS**
    The VPS can perform the Paging feature using the recorded message. (→ 13.1.1 Paging)
12. **Live Call Screening (LCS)**
    A PT or PS user can monitor his own mailbox while a caller is leaving a message and, if desired, answer the call by pressing the LCS button. When the caller is leaving a message in the mailbox, monitoring can be carried out in two ways: each PT user can choose which through personal programming (Live Call Screening Mode Set). PS users cannot choose the way: only Private mode is available for them.
    Hands-free mode: The user can monitor the call automatically through the built-in speaker.
    Private mode: The user will hear a warning tone. To monitor the call, the user goes off-hook with the handset, MONITOR button, or SP-PHONE button. However, PS users cannot monitor the call with the speakerphone.
    → 6.1 [4-1-1] Wired Extension—Extension Settings—Option 1—◆ LCS Answer Mode
13. **Two-way Recording into the VPS**
    A PT user can record a conversation into his own mailbox or another mailbox, while talking on the phone. The Two-way Record button is used to record into one's own mailbox. The Two-way Transfer button is used to record into someone else's mailbox.

PT/PS/SLT extensions can also be programmed to automatically record conversations. When a conversation is recorded, it is saved in the mailbox specified in "**Programmed Mailbox No.**". If multiple VPSs are connected to the PBX, you can select which VPS to record calls to for each extension through system programming.

Note

Before recording a Two-way telephone conversation, you should inform the other party that the conversation will be recorded.

14. **VPS Data Control by the PBX**[*1]
    The date and time settings of the VPS are controlled by the PBX.
15. **Remote FWD Setting by the VM**[*1]
    Extension FWD settings can be programmed using the VPS.

[*1] This feature may not be supported depending on the software version of the VPS.

Conditions

[General]

- When programming a KX-TVA series VPS, if there is no option to connect to a KX-NCP or KX-TDE series PBX, select a KX-TDA series PBX.

[Live Call Screening (LCS)]

- This feature is not available for SIP extensions.
- If an SLT is connected in parallel to a PT, and if LCS is activated for the PT in Private mode, both the PT and SLT can be used to monitor calls while in idle status. The SLT will ring to indicate a message is being recorded. The call can be monitored with the SLT by going off-hook. To intercept the call, press the FLASH/RECALL button or flash the hookswitch. (→ 13.1.2 Paralleled Telephone)
- **LCS Button**
  A flexible button can be customized as the LCS button.
- **Extension Personal Identification Number (PIN)**
  To prevent unauthorized monitoring, it is recommended the LCS user assign an extension PIN. This PIN will be required when setting LCS (→ 5.1.6 Extension PIN (Personal Identification Number)). If the user forgets the PIN, it can be cleared by an extension assigned as the manager.
- Each extension can be programmed to either end recording or continue recording the conversation after the call is intercepted, through personal programming (LCS Mode Set [After Answering]).
  → 6.1 [4-1-1] Wired Extension—Extension Settings—Option 4—◆ LCS Recording Mode
  → 6.10 [4-2-1] Portable Station—Extension Settings—Option 4—◆ LCS Recording Mode
- To use the LCS feature on a PS in Wireless XDP Parallel Mode, LCS can only be turned on or off from the wired telephone. In Wireless XDP Parallel Mode, setting LCS on/off from the PS has no effect. (→ 20.1.5 Wireless XDP Parallel Mode)

[Two-way Recording into the VPS]

- **Two-way Record/Two-way Transfer Button**
  A flexible button can be customized as the Two-way Record or the Two-way Transfer button. An extension number can be assigned to the Two-way Transfer button so that it can be used as a one-touch record button for the mailbox of the specified extension. (**One-touch Two-way Transfer Button**).
- When all of the VPS ports are busy:
  a. Pressing the Two-way Record button sends a warning tone
  b. Pressing the Two-way Transfer button followed by an extension number sends a warning tone.
- On an intercom call, if both parties have automatic two-way recording enabled, the call will be saved in the mailbox of the extension user with the lower extension number.

- If two-way recording is started by pressing a Two-way Record/Two-way Transfer button on a PT or is started through automatic two-way recording, the extension cannot cancel recording through Communication Assistant (CA).

[VM Transfer Button]

- A flexible button can be customized as the VM Transfer button with the floating extension number of the VM group as the parameter.
- If two or more VPSs are connected to a PBX, the VM Transfer button will access the VPS of the VM group assigned as the parameter for the VM Transfer button.
- If a PS is paired with a PT or SLT (in Wireless XDP Parallel mode), the PS's VM Transfer button cannot be used to redirect an incoming call to the called extension's mailbox.

PC Programming Manual References

4.5 [2-3] Timers & Counters—Dial / IRNA / Recall / Tone—◆ Recall—Transfer Recall
5.18 [3-7-1] VM(DPT) Group—System Settings
5.19 [3-7-2] VM(DPT) Group—Unit Settings
6.1 [4-1-1] Wired Extension—Extension Settings—Option 1
→◆ Automatic Recording
→◆ Programmed Mailbox No.
6.1 [4-1-1] Wired Extension—Extension Settings—Option 4
→◆ LCS Recording Mode
→◆ LCS Answer Mode
6.5 [4-1-4] Wired Extension—Flexible Button
→◆ Type
→◆ Extension Number (for Two-way Record)
→◆ Extension Number (for Two-way Transfer)
→◆ Extension Number (for Voice Mail Transfer)
→◆ Ext No. of Mailbox (for Two-way Transfer)
6.10 [4-2-1] Portable Station—Extension Settings—Option 1
→◆ Automatic Recording
→◆ Programmed Mailbox No.
6.10 [4-2-1] Portable Station—Extension Settings—Option 4—◆ LCS Recording Mode
6.13 [4-2-3] Portable Station—Flexible Button
→◆ Type
→◆ Extension Number (for Two-way Record)
→◆ Extension Number (for Two-way Transfer)
→◆ Extension Number (for Voice Mail Transfer)
→◆ Ext No. of Mailbox (for Two-way Transfer)
6.18 [4-3] DSS Console
→◆ Type
→◆ Extension Number (for Two-way Record)
→◆ Extension Number (for Two-way Transfer)
→◆ Extension Number (for Voice Mail Transfer)
→◆ Ext No. of Mailbox (for Two-way Transfer)
7.1 [5-1] Doorphone—◆ VM Trunk Group Number
12.2 [10-2] DIL Table & Port Settings—DIL
→◆ Tenant Number
→◆ VM Trunk Group No.
12.3 [10-3] DID Table
→◆ Tenant Number
→◆ VM Trunk Group No.

PT Programming Manual References

[201] Transfer Recall Time

Feature Manual References

6.1.3 Flexible Buttons
6.1.4 Flexible Numbering/Fixed Numbering
19.1.3 Voice Mail (VM) Group

Operating Manual References

1.3.70 Voice Mail Features—LCS (Live Call Screening)
1.3.71 Voice Mail Features—Two-way Record
1.3.72 Voice Mail Features—Voice Mail Integration
3.1.2 Personal Programming
3.2.2 Manager Programming

19.1.5 Voice Mail DTMF Integration

Description

The PBX and the VPS connected to the PBX can transmit commands using DTMF signals to each other. The PBX sends preprogrammed commands using DTMF to the VPS automatically to change the answering service between Voice Mail (VM) service mode and Automated Attendant (AA) service mode or to inform the extension status (e.g., busy). The VPS sends the commands to the PBX like an SLT.
The following answering services and features are available:

1. **Voice Mail (VM) Service Mode**
   When a caller reaches the VPS, the VPS greets and guides the caller to leave a voice message for a specified mailbox.

   [Example]

   The VPS sends the message to the caller, "Thank you for calling Panasonic. Please enter the mailbox number of the person you wish to leave your message for."

   ↓

   The caller dials the mailbox number. Then, the dialed number is sent to the VPS via the PBX.

   ↓

   The VPS sends the personal greeting to the caller, "You have reached Mike's voice mail. I am sorry I cannot take your call right now. Please leave a message and I will call you back."

   ↓

   The caller leaves a message.

   If the call reroutes to the floating extension number of the VM (DTMF) Group or the extension in the VM (DTMF) group by such as the FWD feature, when the VPS answers the call, the PBX will dial the mailbox number of the corresponding group or extension and any other digits required to the VPS automatically using the caller-dialed number (Follow on ID). In this case, the caller can reach a mailbox without knowing the mailbox number.

[Available Features for Follow on ID]

a. FWD to a Mailbox
b. Intercept Routing to a Mailbox
c. Call Transfer to a Mailbox
d. Listening to a Message in a Mailbox

2. **Automated Attendant (AA) Service Mode**
   The VPS greets and guides the caller to the desired extension directly without operator assistance.
3. **VM → AA Service, AA → VM Service**
   It is possible to switch the service mode assigned on the VPS port, from the VM service to AA service or vice versa.

System Explanation

1. **Service Mode Assignment**
   Assign the service mode, VM service or AA service, to the VM (DTMF) group to correspond with the assignment of the VPS.
   5.22 [3-8-2] VM(DTMF) Group—Group Settings—◆ Type
2. **DTMF Command Assignment**
   Assign the DTMF command to suit the VPS settings.
   5.21 [3-8-1] VM(DTMF) Group—System Settings
   → ◆ VM DTMF Command—Recording Message
   → ◆ VM DTMF Command—Listening Message
   → ◆ VM DTMF Command—Switching to AA
   → ◆ VM DTMF Command—Switching to VM

	Command (Default)
Switching to VM	#6
Switching to AA	#8
Recording message	H
Listening message	⁎H

Note

H = Mailbox Number

3. **VM Service**
   a. FWD to a Mailbox of the VPS
   The PBX sends a mailbox number of the corresponding extension to the VPS when a call is forwarded from an extension to the VPS. Therefore the caller can leave a message for the called extension without knowing the mailbox number.

[FWD to the VPS Sequence Selection]

If an extension user sets FWD to the VPS, any incoming call will be forwarded to the VPS.
It is also possible to send the AA command, even in the VM service mode, when calls are forwarded so that the caller can be directed to an extension rather than a mailbox. This can be performed by selecting "**AA**" through system programming.
→ 5.21 [3-8-1] VM(DTMF) Group—System Settings—◆ Others—FWD to the VPS Sequence

Parameter	Transmitted Command	
	In AA Service Mode	In VM Service Mode
Answer by Mailbox (Default)	Switching to VM command + Recording message command (#6 + H [H = Mailbox No.])	Recording message command (H [H = Mailbox No.])
AA	Switching to AA command (#8)	Switching to AA command (#8)
None	(DTMF commands are not sent. Work with default of the VPS.)	

b. Intercept Routing to a Mailbox of the VPS

The PBX sends a mailbox number of the corresponding extension to the VPS when a CO line call is intercepted from an extension to the VPS. Therefore the caller can leave a message for the called extension without knowing the mailbox number.

[Intercept Routing to the VPS Sequence Selection]

If an extension user sets Intercept Routing to the VPS, the intercepted CO line calls will be redirected to the VPS.

It is also possible to send the AA command, even in the VM service mode, when calls are intercepted so that the caller can be directed to an extension rather than a mailbox. This can be performed by selecting "**AA**" through system programming.

→ 5.21 [3-8-1] VM(DTMF) Group—System Settings—◆ Others—Intercept Routing to the VPS Sequence

Parameter	Transmitted Command	
	In AA Service Mode	In VM Service Mode
Answer by Mailbox	Switching to VM command + Recording message command (#6 + H [H = Mailbox No.])	Recording message command (H [H = Mailbox No.])
AA	Switching to AA command (#8)	Switching to AA command (#8)
None (Default)	(DTMF commands are not sent. Work with default of the VPS.)	

[Example of a) & b)]

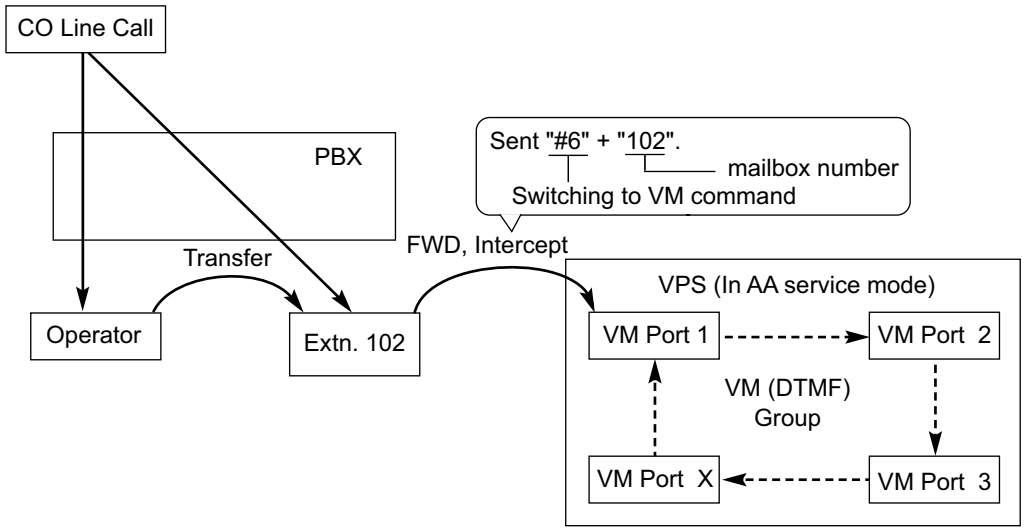

c. Voice Mail (VM) Transfer Button

By pressing the Voice Mail (VM) Transfer button during a call, an extension user can transfer a call to a mailbox of the VPS so that the caller can leave a message in the mailbox of the desired extension. When the extension user presses this button and enters the desired extension number, the PBX will transfer the call to the VM group and dial the mailbox number of the desired extension with the required command (after the VPS answers the call). Therefore the caller can leave a message without knowing the mailbox number.

6.5 [4-1-4] Wired Extension—Flexible Button
→ ◆ Type
→ ◆ Extension Number (for Voice Mail Transfer)
6.13 [4-2-3] Portable Station—Flexible Button
→ ◆ Type
→ ◆ Extension Number (for Voice Mail Transfer)
6.18 [4-3] DSS Console
→ ◆ Type
→ ◆ Extension Number (for Voice Mail Transfer)

[Performance of Pressing the VM Transfer Button and Entering an Extension Number]

Transmitted Command	
In AA Service Mode	**In VM Service Mode**
Switching to VM command + Recording message command (#6 + H [H = Mailbox No.])	Recording message command (H [H = Mailbox No.])

[Example]

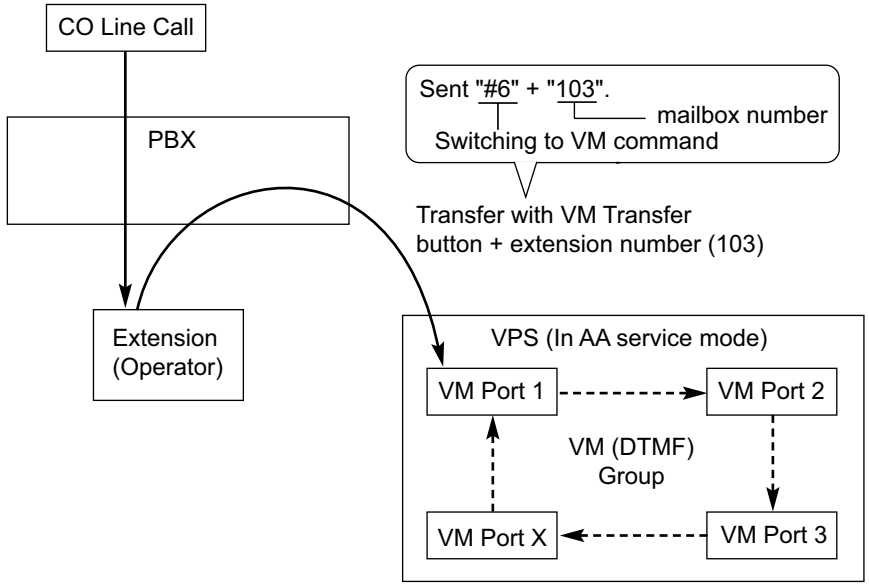

d. Listening to a Recorded Message

If the VPS receives a message, the VPS will set the Message Waiting feature on the corresponding telephone to notify the extension user that there is a message waiting in his mailbox. The Message button light of the extension will turn on (→ 11.1.3 Message Waiting), thereby notifying the extension user that there is a message waiting in his mailbox. When the Message button light turns on, pressing the button allows the extension user to play back the messages stored in his mailbox without dialing such as a mailbox number. It is programmable whether the PBX or the VPS cancels the Message Waiting feature (e.g., turning off the Message button light).
5.21 [3-8-1] VM(DTMF) Group—System Settings—◆ Others—Message Waiting Lamp Control

When the PBX is selected, the Message Waiting feature is canceled after the extension user has accessed the VPS. When the VPS is selected, the Message Waiting feature is canceled after the extension user has listened to messages stored in his mailbox.

[Performance of Pressing the MESSAGE Button]

Transmitted Command	
In AA Service Mode	**In VM Service Mode**
Switching to VM command + Listening message command (#6 + ⁎H [H = Mailbox No.])	Listening message command (⁎H [H = Mailbox No.])

[Example]

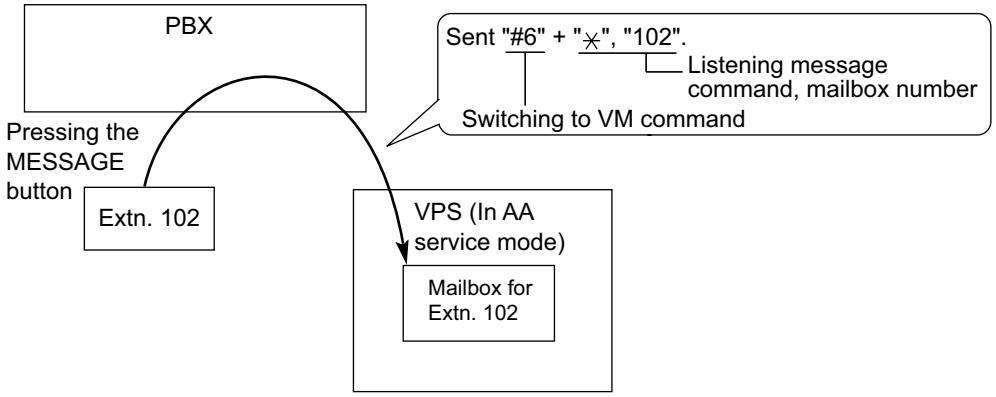

4. AA Service

If the VPS transfers the call using the AA service, the PBX will inform the VPS of the status of the called destination with the preprogrammed DTMF status signal so that the VPS can confirm the status of the extension without listening to the system tones (e.g., ringback tone).
Assign the DTMF status signal to suit the VPS settings.

[DTMF Status Signals and Conditions]

Status	Condition	Default Command
RBT (ringback tone)	The PBX is ringing the corresponding extension.	1
BT (busy tone)	The called extension is busy.	2
ROT (reorder tone)	The dialed number is invalid.	3
DND (DND tone)	The called extension has set DND. (→ 4.1.10 DND (Do Not Disturb))	4
Answer	The called extension has answered the call.	5
FWD VM RBT (FWD to Voice Mail ringback tone)	The called extension has set FWD to VPS and the PBX is calling another port of the VPS.	6
FWD VM BT (FWD to Voice Mail busy tone)	The called extension has set FWD to VPS and all ports of the VPS are busy.	7
FWD EXT RBT (FWD to extension ringback tone)	The PBX is calling an extension other than the one dialed. FWD or Idle Extension Hunting (→ 9.1.9 Idle Extension Hunting) may be assigned by the called extension.	8
Confirm (confirmation tone)	The PBX receives confirmation that the feature has been successfully set or canceled (e.g., Message Waiting) on the extension.	9
Disconnect	The caller has hung up.	#9

5.21 [3-8-1] VM(DTMF) Group—System Settings
→ ◆ VM DTMF Status Signal—Ringback Tone
→ ◆ VM DTMF Status Signal—Busy Tone
→ ◆ VM DTMF Status Signal—Reorder Tone
→ ◆ VM DTMF Status Signal—DND Tone

→ ◆ VM DTMF Status Signal—Answer
→ ◆ VM DTMF Status Signal—Confirm
→ ◆ VM DTMF Status Signal—Disconnect
→ ◆ VM DTMF Status Signal—FWD to VM Ringback Tone
→ ◆ VM DTMF Status Signal—FWD to VM Busy Tone
→ ◆ VM DTMF Status Signal—FWD to Extension Ringback Tone

[Example]

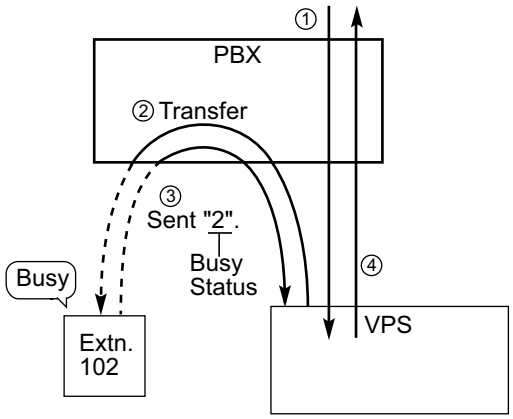

① An incoming call reaches the VPS. The VPS greets the caller: "Thank you for calling Panasonic. If you know the extension number of the person you wish…".

② The caller dials the extension number (extn. 102). The VPS will transfer the call to the extension via the PBX.

③ If the extension is not available, the PBX sends DTMF status signal of the extension (busy status) to the VPS.

④ The VPS receives the DTMF status signal and send the appropriate message to the caller: "Sorry. The extension is busy. Would you like to leave a message…".

Conditions

- **Voice Mail (VM) Transfer Button**
  A flexible button can be customized as the Voice Mail (VM) Transfer button with the floating extension number of the VM group as the parameter.
- It is possible to assign the time period between when the VPS answers the call and the PBX sends the Follow on ID to the VPS.
  → 5.21 [3-8-1] VM(DTMF) Group—System Settings—◆ Timing—Waiting Time before Sending Follow on ID
- It is possible to assign the time period between when the VPS transfers the call using the AA service to the PBX and the PBX sends the DTMF status signal to the VPS.
  → 5.21 [3-8-1] VM(DTMF) Group—System Settings—◆ Timing—DTMF Length for VM
- It is possible to select whether the mailbox number is the same as the extension number, or the mailbox number is programmable for each extension number and incoming call distribution group (Mailbox Access ID).
  → 5.12 [3-5-1] Incoming Call Distribution Group—Group Settings—Miscellaneous—◆ Programmed Mailbox No.
  → 6.1 [4-1-1] Wired Extension—Extension Settings—Option 1—◆ Programmed Mailbox No.
  → 6.10 [4-2-1] Portable Station—Extension Settings—Option 1—◆ Programmed Mailbox No.
- The Inter-digit time for the DTMF command and for DTMF status signal is programmable.
  → 5.21 [3-8-1] VM(DTMF) Group—System Settings
  → ◆ Timing—Inter-digit Time
  → ◆ Timing—Waiting Time before Sending VM DTMF Status Signal
- Data Line Security is set automatically on the extensions in the VM (DTMF) group to achieve proper recording. (→ 4.1.1 Data Line Security)

PC Programming Manual References

4.5 [2-3] Timers & Counters—Miscellaneous—◆ Voice Mail (Caller from VM to CO)—On-hook Wait Time
5.12 [3-5-1] Incoming Call Distribution Group—Group Settings—Miscellaneous—◆ Programmed Mailbox No.
5.21 [3-8-1] VM(DTMF) Group—System Settings
5.22 [3-8-2] VM(DTMF) Group—Group Settings
6.1 [4-1-1] Wired Extension—Extension Settings—Option 1—◆ Programmed Mailbox No.
6.5 [4-1-4] Wired Extension—Flexible Button
→◆ Type
→◆ Extension Number (for Voice Mail Transfer)
6.10 [4-2-1] Portable Station—Extension Settings—Option 1—◆ Programmed Mailbox No.
6.13 [4-2-3] Portable Station—Flexible Button
→◆ Type
→◆ Extension Number (for Voice Mail Transfer)
6.18 [4-3] DSS Console
→◆ Type
→◆ Extension Number (for Voice Mail Transfer)

Feature Manual References

3.1.11 Call Transfer
6.1.3 Flexible Buttons
6.1.6 FWD (Call Forwarding)
9.1.11 Intercept Routing
19.1.3 Voice Mail (VM) Group

Operating Manual References

1.3.72 Voice Mail Features—Voice Mail Integration

Section 20

Features and Configurations—W

20.1 W

20.1.1 Walking COS

Description

A user can enter his extension number and extension personal identification number (PIN) (→ 5.1.6 Extension PIN (Personal Identification Number)) at another extension, to make the following types of call using his Class of Service, including TRS level, overriding the other extension's Class of Service.

- CO line call
- TIE line call
- Intercom call
- External Relay Control (→ 5.1.8 External Relay)

After performing Walking COS, the following features are also available for the specified extension:

- Call Forwarding (FWD)/Do Not Disturb (DND) setting (→ 4.1.10 DND (Do Not Disturb), → 6.1.6 FWD (Call Forwarding))
- Incoming Call Distribution Group Log-in/Log-out (→ 9.1.3 ICD Group Features—Log-in/Log-out)
- Absent Message setting (→ 1.1.1 Absent Message)
- Extension Dial Lock (→ 5.1.4 Extension Dial Lock)
- Time Service—Changing the Time Mode (day/lunch/break/night) (→ 17.1.5 Time Service)
- CLIP number setting (CLIP ID) (→ 3.1.16 CLIP (Calling Line Identification Presentation))

Conditions

- When a CO line call is made using Walking COS:
  - the Class of Service of the specified extension is applied (→ 3.1.23 COS (Class of Service))
  - the Itemized Billing code of the specified extension is applied (→ 1.1.3 ARS (Automatic Route Selection))
  - the specified extension number is recorded on SMDR as the call originator, instead of the extension number of the actual extension used (→ 16.1.4 SMDR (Station Message Detail Recording)).
- Walking COS is also available through DISA. (→ 4.1.8 DISA (Direct Inward System Access))
- **Extension PIN**
  An extension personal identification number (PIN) is required to use this feature (→ 5.1.6 Extension PIN (Personal Identification Number)). If the wrong PIN is entered three times, the line will be disconnected.
- This feature can not be used for extensions which the extension being operated is prevented from calling by Internal Call Block. (→ 9.1.14 Internal Call Block)

PC Programming Manual References

4.9 [2-6-1] Numbering Plan—Main—Features—◆ User Remote Operation / Walking COS / Verification Code
4.12 [2-7-1] Class of Service—COS Settings—Optional Device & Other Extensions—◆ Remote Operation by Other Extension
6.1 [4-1-1] Wired Extension—Extension Settings—Main—◆ Extension PIN
6.10 [4-2-1] Portable Station—Extension Settings—Main—◆ Extension PIN

PT Programming Manual References

[005] Extension Personal Identification Number (PIN)

Feature Manual References

3.1.23 COS (Class of Service)
4.1.8 DISA (Direct Inward System Access)

Operating Manual References

1.3.74 Walking COS

20.1.2 Walking Extension

Description

It is possible for an extension user to trade extension settings with another extension.
When Walking Extension is executed, all extension settings (extension number, Class of Service (COS), One-touch Dialing memory, etc.) of the "old" extension are exchanged with the "new" extension.
This feature is useful when an extension user moves desks, or when an extension user has no permanent desk.
This feature is also known as Walking Station.

Conditions

- This feature allows extension settings to be switched between PTs (including IP-PTs) and SLTs. Moving between tenants is also possible.
- Incoming calls to your extension will reach you at your new location.
- An extension personal identification number (PIN) is required to use this feature. (→ 5.1.6 Extension PIN (Personal Identification Number))
- If a DSS Console is connected to a PT and the DSS Console is continuously used with the PT after the Walking Extension has been performed, the new extension number of the PT must be assigned as the paired extension through system programming.
- If the Walking Extension feature is performed at the same time that the target extension is being programmed by PC, the Walking Extension feature may not work properly. (→ 13.1.6 PC Programming)
- If this feature is performed using an extension with a Bluetooth wireless headset connected, the Bluetooth device cannot be used with the new extension. To use the Bluetooth wireless headset, register it to the new extension.

PC Programming Manual References

4.9 [2-6-1] Numbering Plan—Main—Features—◆ Walking Extension
6.1 [4-1-1] Wired Extension—Extension Settings—Main—◆ Extension PIN
6.18 [4-3] DSS Console—◆ Pair Extension

PT Programming Manual References

[007] DSS Console Paired Telephone

Feature Manual References

9.1.15 IP-PT (IP Proprietary Telephone)

Operating Manual References

1.3.75 Walking Extension

20.1.3 Walking Extension, Enhanced

Description

It is possible to use the Walking Extension feature with extensions in Service-in (functions normally) and Service-out (cannot make CO line calls or receive calls) modes, allowing extensions and locations (i.e., telephones) to be utilized more efficiently. Extensions can be set to Service-out mode when the extension user is not using the extension or to prevent calls from being made or received when no one is using the location. The extension can then be changed to Service-in mode when the extension user wishes to use the extension. Enhanced Walking Extension can be utilized as follows:

– **When a single extension user uses multiple telephones**
Extension users can switch locations with a Service-out extension. This allows extension users to use their settings at another location while the previous location is in service-out mode. This is ideal for when extension users need to work at multiple locations, such as another department, branch office, or at home.

– **When multiple extension users use the same telephone**
Extension users can change the service status of their Service-out extension to Service-in mode and switch locations with another extension with a simple operation. This is ideal for when the same telephone is used by multiple extension users who work in shifts.

Service-out mode

When an extension is in Service-out mode, the DND, Extension Lock, and Display Lock features are set on the extension, preventing the extension from doing the following:

- Making CO line calls
- Receiving calls
- Displaying the personal speed dialing directory, call log, or SVM log
- Playing back voice messages in the extension's mailbox

[Example]

Extension settings can be used at other locations as follows:

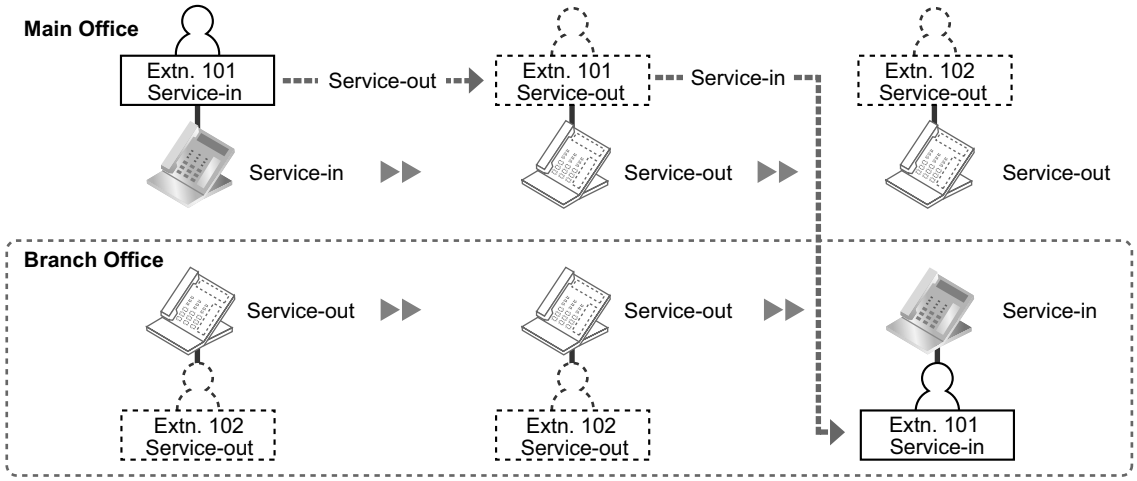

Explanation:
The extension user of extension 101 changes to Service-out mode at the main office. He then changes his extension to Service-in mode and switches extension settings at the branch office.

Virtual Locations

Instead of assigning all extensions to telephones, it is possible to store unused extensions (i.e., Service-out mode) on a preinstalled extension card (i.e., settings are made but no physical location is utilized). When the extension needs to be used, the extension can switch locations and service status with an extension on a physical location (i.e., a location with a telephone).

[Example]

Extension settings can be switched allowing multiple extension users to use the same telephone as follows:

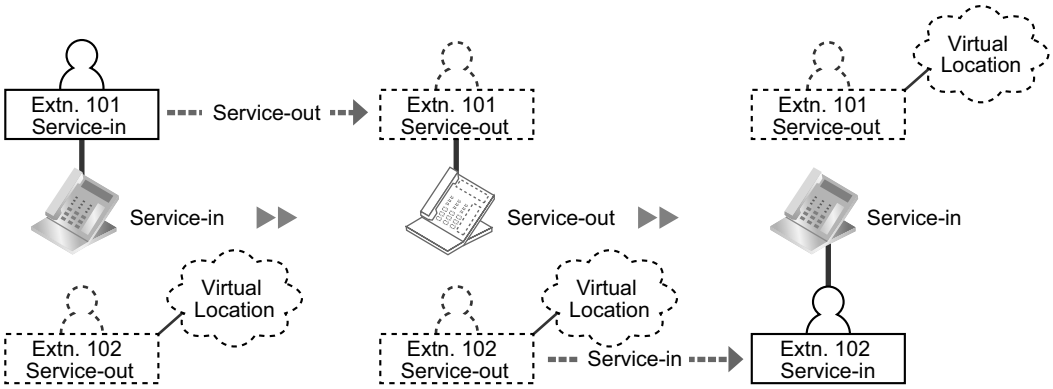

Explanation:

The extension user of extension 101 changes to service out mode. The extension user of extension 102 switches extension settings and changes his extension to Service-in mode.

Conditions

- This feature is not available for PSs, T1 OPX extensions, and SIP extensions.
- An extension personal identification number (PIN) is required to use this feature. (→ 5.1.6 Extension PIN (Personal Identification Number))

PC Programming Manual References

4.9 [2-6-1] Numbering Plan—Main—Features—◆ Walking Extension

Feature Manual References

20.1.2 Walking Extension

Operating Manual References

1.3.76 Walking Extension, Enhanced

20.1.4 Whisper OHCA

Description

An extension user can speak to a busy extension through the handset.

Conditions

- Class of Service (COS) programming determines which extensions can use this feature.
- This feature is available when the calling and called extension use one of the following telephones:
  - KX-DT300 series
  - KX-T7600 series
  - KX-T7400 series
  - IP-PT
- If the Whisper OHCA feature cannot be used due to COS or telephone type, a call waiting tone will be sent to the called extension. (→ 3.1.13 Call Waiting Tone)
- If the called extension does not use a KX-DT300, KX-T7600, or KX-T7400 series telephone or an IP-PT, but forces Whisper OHCA, the announcement may be heard by the other party.
- It is possible to enable Whisper OHCA on any telephone, however, it may not function properly (the caller's voice may be heard by both callers, for example).
- While an extension is receiving a Whisper OHCA, if the extension user places the current CO line call on hold or transfers the current intercom call or CO line call, the Whisper OHCA will become disabled and the calling extension will hear a ringback tone.
- While an extension is receiving a Whisper OHCA, if the extension user places the current intercom call on hold, the called extension can talk to the calling extension through the handset.

PC Programming Manual References

4.11 [2-6-3] Numbering Plan—B/NA DND Call Feature
→◆ BSS / OHCA / Whisper OHCA / DND Override
→◆ BSS / OHCA / Whisper OHCA / DND Override-2
4.12 [2-7-1] Class of Service—COS Settings—Assistant—◆ OHCA / Whisper OHCA

Feature Manual References

3.1.23 COS (Class of Service)

Operating Manual References

1.3.13 Call Waiting Tone

20.1.5 Wireless XDP Parallel Mode

Description

A portable station (PS) can be used in parallel with a wired telephone, i.e., a digital proprietary telephone (DPT), analog proprietary telephone (APT), or single line telephone (SLT), allowing an extension user to make or receive calls with either the wired telephone or the PS. The PS will use the same extension number as the wired telephone, and many of the wired telephone's extension settings (Call Forwarding [FWD], Class of Service [COS], etc.) are also used by the PS.
This mode is similar to XDP Parallel mode used to pair DPTs with SLTs. (→ 5.1.7 Extension Port Configuration)
In order to use a PS in Wireless XDP Parallel mode, the mode must be turned on using the PS.

[Example of Wireless XDP Parallel Mode, XDP Parallel Mode]

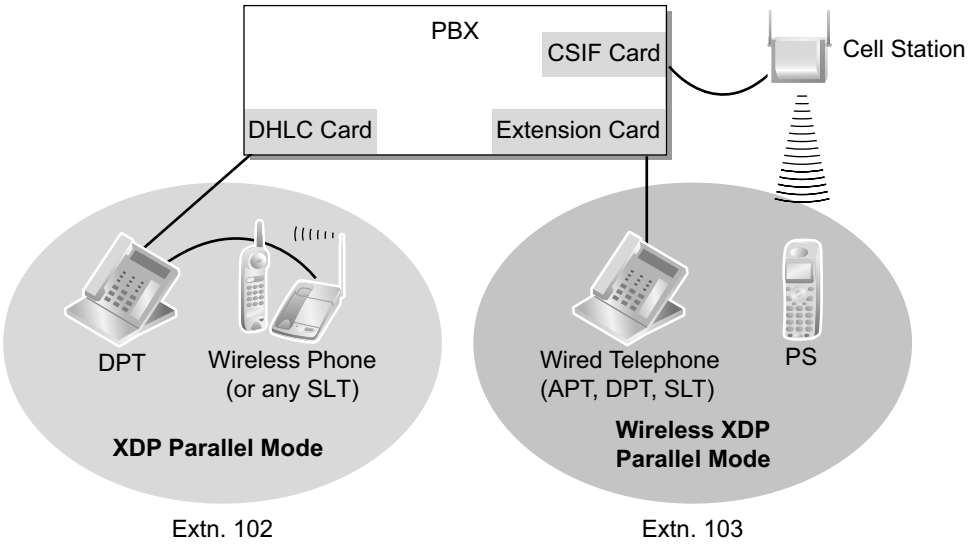

Conditions

- Whether or not a PS is allowed to pair itself with a wired telephone is determined by the COS assigned to the extension number of the wired telephone.
- Wireless XDP Parallel mode can be turned on or off using the PS only.
- To switch between the wired telephone and the PS during a conversation, simply go off-hook with the other telephone. Alternatively, to seize a separate line, use another method, such as pressing a CO or INTERCOM button.
  In addition, going off-hook with the other telephone seizes a separate line when the extension is:
  a. Engaged in a conference call. (→ 3.1.19 Conference, → 5.1.3 Executive Busy Override, → 13.1.14 Privacy Release)
  b. Screening a call using Live Call Screening (LCS) or when recording a conversation using Two-way Record. (→ 19.1.4 Voice Mail DPT (Digital) Integration)
  c. Receiving an Off-hook Call Announcement (OHCA). (→ 12.1.3 OHCA (Off-hook Call Announcement))
  d. Being monitored by another extension. (→ 3.1.7 Call Monitor)
  e. When the extension has a call on consultation hold. (→ 3.1.22 Consultation Hold)
- When a PS in Wireless XDP Parallel mode is on a call, other extension users cannot perform the following features when they call this extension:
  – Executive Busy Override (→ 5.1.3 Executive Busy Override)
  – Whisper OHCA (→ 20.1.4 Whisper OHCA)
- When a PS is paired with a wired telephone, most of the extension settings assigned to the wired telephone (extension number, extension name, etc.) will be used by the PS, and the PS will use its own extension settings once again when Wireless XDP Parallel mode is canceled. Note, however, that the following extension settings of the wired telephone are copied to the extension settings of the PS when Wireless XDP Parallel mode is activated, and will remain in effect for the PS after the mode is canceled.
  – Call Waiting Setting (→ 3.1.12 CALL WAITING FEATURES)
  – FWD/Do Not Disturb (DND) Setting (→ 4.1.10 DND (Do Not Disturb), → 6.1.6 FWD (Call Forwarding))
  – Call Pickup Deny Setting (→ 3.1.9 Call Pickup)
  – Executive Busy Override Deny Setting (→ 5.1.3 Executive Busy Override)
  – Itemized Billing Code for Automatic Route Selection (ARS) (→ 1.1.3 ARS (Automatic Route Selection))

  - Calling Line Identification Presentation (CLIP) Number and CLIP Number Selection (→ 3.1.16 CLIP (Calling Line Identification Presentation))
  - Calling Line Identification Restriction (CLIR) and Connected Line Identification Restriction (COLR) Settings (→ 3.1.16 CLIP (Calling Line Identification Presentation))
  - Extension Personal Identification Number (PIN) (→ 5.1.6 Extension PIN (Personal Identification Number))
  - COS Programming (→ 3.1.23 COS (Class of Service))
  - Extension User Group (→ 7.1.1 GROUP FEATURES)
  - Transfer Recall Destination for Call Transfer and Call Park (→ 3.1.8 Call Park, → 3.1.11 Call Transfer)
- The PS will retain its original settings for the following items even when in Wireless XDP Parallel mode. These settings can be set on the wired telephone and PS independently, and the settings can be different.
  - Ring Tone Pattern Table Selection (→ 15.1.2 Ring Tone Pattern Selection)
  - Preferred Line Assignment—Incoming (→ 10.1.2 Line Preference—Incoming)
  - Preferred Line Assignment—Outgoing (→ 10.1.3 Line Preference—Outgoing)
  - Hot Line Setting (→ 8.1.6 Hot Line)
  - Display Language (→ 4.1.9 Display Information)
  - ISDN Bearer Mode (→ 9.1.16 ISDN (INTEGRATED SERVICES DIGITAL NETWORK) FEATURES)
  - Flexible Button Assignment (→ 6.1.3 Flexible Buttons)
  - Transfer Recall Destination for Call Transfer and Call Park (The setting assigned to the wired telephone will first be copied to the PS's extension settings, then can be changed for the PS if necessary.) (→ 3.1.8 Call Park, → 3.1.11 Call Transfer)

  If an extension number is required when changing any PS settings while in Wireless XDP Parallel mode, use the original extension number assigned to the PS, not the extension number of the paired (wired) telephone.
- If the Extension Feature Clear is performed, the corresponding extension data for both the wired telephone and the PS will be cleared. (→ 5.1.5 Extension Feature Clear)
- When a call arrives, both the wired telephone and the PS will ring. However, when one of the following settings is made, only the telephone which was used to make the setting will ring.
  - Automatic Callback Busy (→ 1.1.4 Automatic Callback Busy (Camp-on))
  - Transfer Recall (→ 3.1.11 Call Transfer)
  - Hold Recall (→ 3.1.5 Call Hold)
  - Call Park Recall (→ 3.1.8 Call Park)

PC Programming Manual References

3.24 [1-1] Slot—Port Property - Extension Port—◆ DPT Type—Type
3.47 [1-2] Portable Station—PS Registration and De-registration
4.9 [2-6-1] Numbering Plan—Main—Features—◆ Wireless XDP Parallel Mode Set / Cancel
4.12 [2-7-1] Class of Service—COS Settings—Optional Device & Other Extensions—◆ Accept Wireless XDP Parallel Mode Set by PS
6.1 [4-1-1] Wired Extension—Extension Settings—Option 1—◆ Wireless XDP

PT Programming Manual References

[515] Wireless XDP Parallel Mode for Paired Telephone

Feature Manual References

3.1.23 COS (Class of Service)
13.1.2 Paralleled Telephone

Operating Manual References

1.3.78 Wireless XDP Parallel Mode

Section 21

Appendix

21.1 Capacity of System Resources

System

Item	Capacity	
	KX-NCP500/KX-NCP1000/ KX-TDE100/KX-TDE200	KX-TDE600
Absent Message—Extension	1 x 16 characters	
Absent Message—System	8 x 16 characters	
Call Park Zone	100	
Conference	3–8 parties per conference (32 parties total)	Each shelf: 3–8 parties per conference (32 parties total)
COS	64	
DID Table	32 digits, 1000 entries	
Extension number	1–5 digits	
Extension Personal Identification Number (PIN)	10 digits, 1 entry/extension	
Host PBX Access Code	10 digits, 10 entries/trunk group	
Number of Characters of Name	20	
Printing message	8	
Queuing Time Table	64	128
Ring Tone Pattern Plan	8	
Simultaneous Programmers	• one system programmer + 63 personal programmers • one manager programmer + 63 personal programmers • 64 personal programmers	
SMDR Call Storage	200 calls (KX-TDE100/ KX-TDE200 only: 10 000 calls w/ IPCMEC card)	1000 calls (20 000 calls w/ IPCMEC card)
Special Carrier Access Code	16 digits, 20 entries	16 digits, 100 entries
Tenant	8	32
Time Service Holiday	24	
Verification Code	4 digits, 1000 entries	
Verification Code Personal Identification Number (PIN)	10 digits, 1000 entries	

Dialing

Item	Capacity	
	KX-NCP500/KX-NCP1000/ KX-TDE100/KX-TDE200	KX-TDE600
Emergency Call	32 digits, 10 entries	
Hot Line	32 digits	
Personal Speed Dialing	32 digits, 100 entries/extn.	
Quick Dialing	8 digits, 4080 entries	
Redial	32 digits	
System Speed Dialing	32 digits, 1000 entries/tenant	
One-touch Dialing—PT/DSS	32 digits, 2000 entries/system	32 digits, 5000 entries/system
One-touch Dialing—PS	32 digits, 500 entries/system	32 digits, 1000 entries/system

Groups

Item	Capacity	
	KX-NCP500/KX-NCP1000/ KX-TDE100/KX-TDE200	KX-TDE600
Conference Group	8 (8 members/group for Conference Group Mode, 32 members/group for Broadcast Mode)	
Call Pickup Group	64	96
Idle Extension Hunting Group	64 (16 extensions/group)	128 (16 extensions/group)
Incoming Call Distribution Group	128 (128 extensions/group)	
Paging Group	32	96
PS Ring Group	32	
Trunk Group	64	96
VM (DPT) Group	2 groups x 12 ports (24 channels)	8 groups x 12 ports (24 channels)
VM (DTMF) Group	2 groups x 32 channels	8 groups x 32 channels

TRS

Item	Capacity
TRS Level	7
TRS Denied Code	16 digits, 100 entries/level
TRS Exception Code	16 digits, 100 entries/level

ARS

Item	Capacity
Routing Plan Table	48 entries
Leading Number Table	16 digits, 1000 entries
Leading Number Exception Table	16 digits, 200 entries
ARS Carrier	48
Itemized Billing Code	10 digits
Authorization Code for Tenant	16 digits
Authorization Code for Trunk Group	10 digits

Call Log and Message Waiting

Item	Capacity		
	KX-NCP500/ KX-NCP1000	KX-TDE100/ KX-TDE200	KX-TDE600
Outgoing Call Log—PT	100 records/extn. 840 records/system	100 records/extn. 1520 records/system	100 records/extn. 3200 records/system
Outgoing Call Log—PS	100 records/extn. 320 records/system	100 records/extn. 640 records/system	100 records/extn. 2560 records/system
Incoming Call Log—PT	100 records/extn. 1680 records/system	100 records/extn. 3040 records/system	100 records/extn. 6400 records/system
Incoming Call Log—PS + Incoming Call Distribution Group	100 records/extn. or group Total 1536 records/ system	100 records/extn. or group Total 2048 records/ system	100 records/extn. or group Total 6400 records/ system
Message Waiting—PS + Incoming Call Distribution Group	192	256	640
Message Waiting—PT + SLT	512	512	1280

Voice Message

Item	Capacity
Outgoing Message (OGM)	64
OGM Total Recording Time	MSG4 Card: 8 minutes; ESVM4 Card: 20 minutes (at High recording quality)
Simplified Voice Message (SVM)	MPR Card: 125 messages; ESVM4 Card: 250 messages per card/block
SVM Total Recording Time	20, 60, or 120 minutes (depending on the recording quality)

Hospitality Features

Item	Capacity
Hotel Operator	4

Networking

Item	Capacity
TIE Line Routing and Modification Table	32 entries
Leading Number	3 digits
PBX Code	7 digits
NDSS: Monitored PBXs	8
NDSS: Registered Extensions for Monitor PBX	250

CTI

Item	Capacity			
	KX-NCP500	KX-NCP1000	KX-TDE100	KX-TDE200/KX-TDE600
PC Console	8	8	8	8
PC Phone	20	36	64	128

Password

Item	Capacity
System Password for Installer	4 – 10 characters
System Password for Administrator—for PC Programming	4 – 10 characters
System Password for User—for PC Programming	4 – 10 characters
System Password for Administrator—for PT Programming	4 – 10 digits
System Password for User—for PT Programming	4 – 10 digits
Manager Password	4 – 10 digits

Programmer Code

Item	Capacity
Installer Level Programmer Code	4 – 16 characters
Administrator Level Programmer Code	4 – 16 characters
User Level Programmer Code	0 – 16 characters

21.2 Tones/Ring Tones

Tone Patterns (Default)

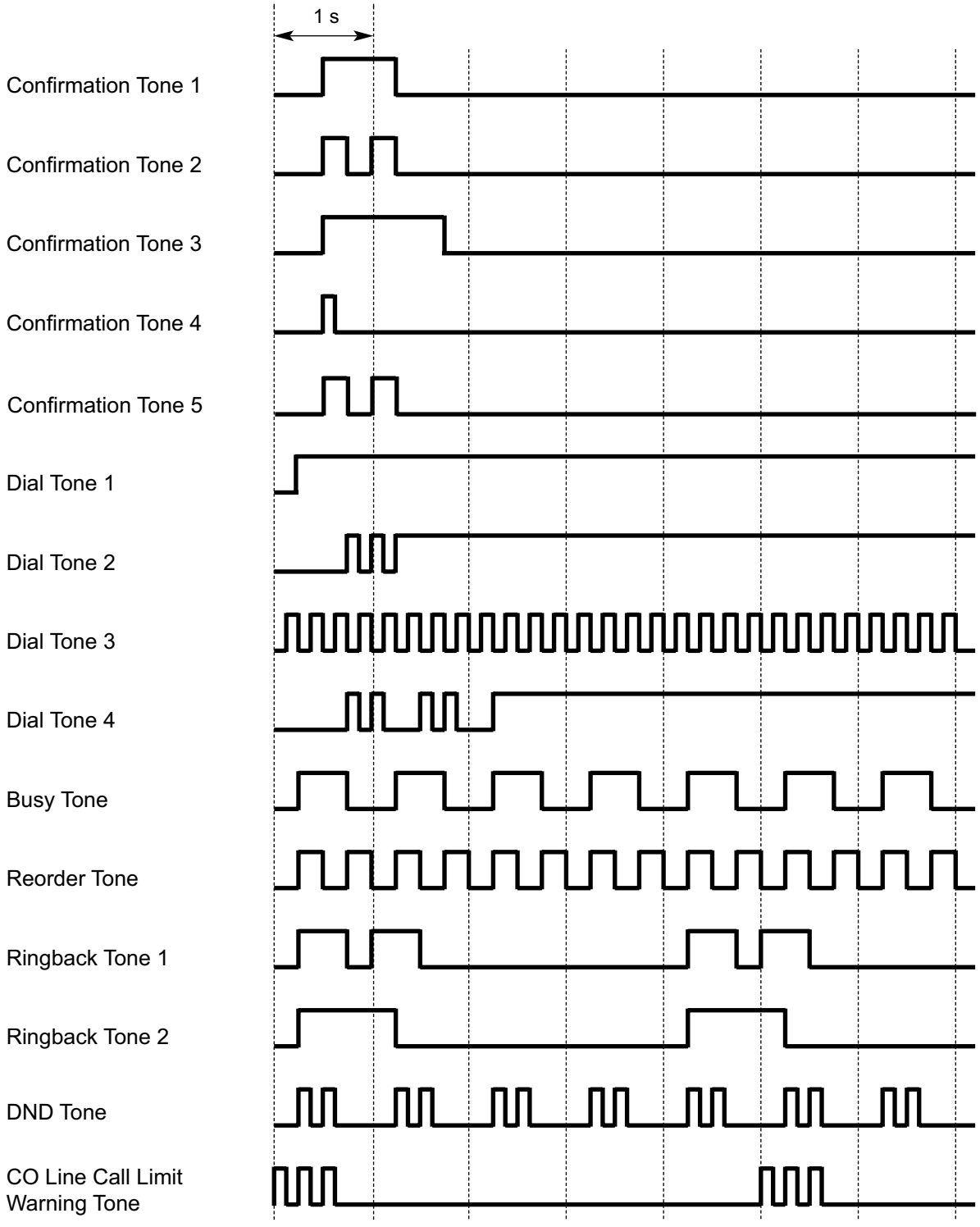

Tone Patterns (Default)

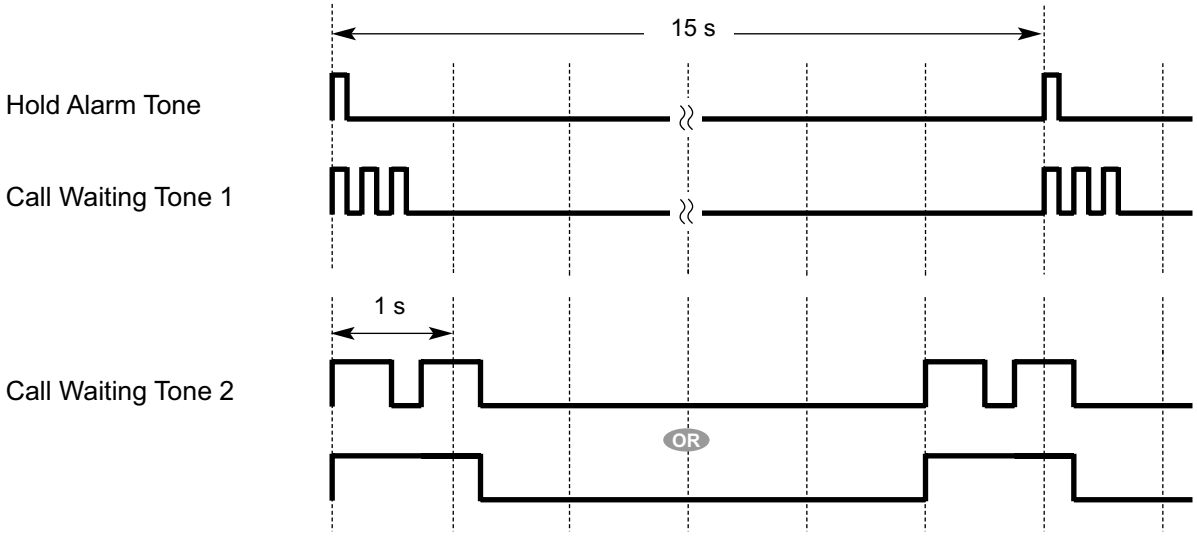

Ring Tone Patterns (Default)*

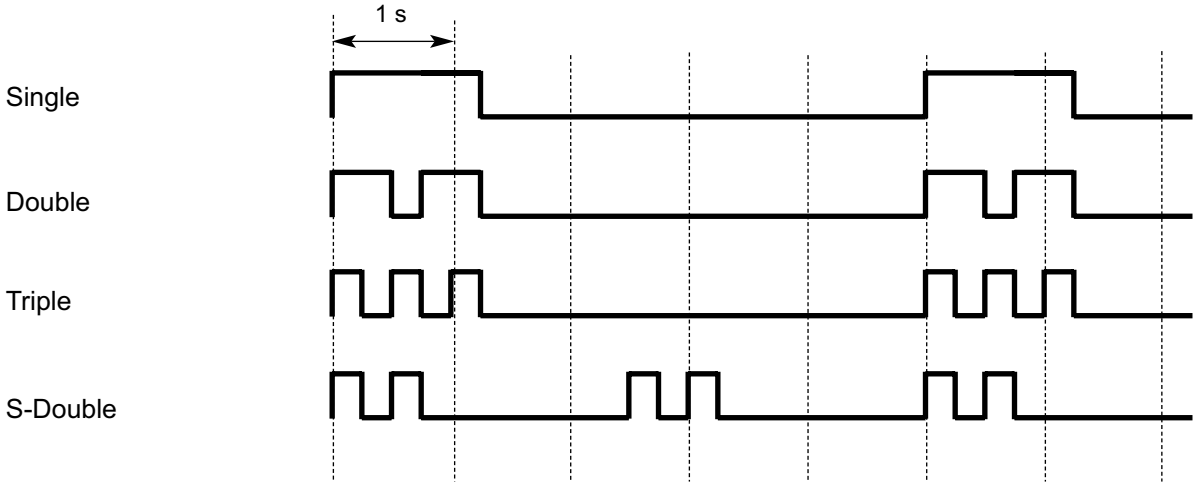

21.3 Supported Management Information Base (MIB) Table

System Group (1.3.6.1.2.1.1)

Object ID	Item	Description
1	sysDescr	Information of Hardware type and Software version of the Device.
2	sysObjectID	Object identifier of this product.
3	sysUpTime	Elapsed time since the system was restarted.
4	sysContact	Device Administrator.
5	sysName	Name of Device.
6	sysLocation	Installation Location of Device.
7	sysService	Support Layer.

Interface Group (1.3.6.1.2.1.2)

Object ID	Item	Description
1	ifNumber	The number of Network Devices.
2	IfTable (NA)	Management Table by each Network Device.
2.1	IfEntry (NA)	Components of ifTable.
2.1.1	ifIndex	Each interface identifier.
2.1.2	ifDescr	Explanation of Interface.
2.1.3	ifType	Type of Interface.
2.1.4	ifMtu	Maximum Datagram Length which can be sent/received.
2.1.5	ifSpeed	Maximum Transfer Speed.
2.1.6	ifPhysAddress	Physical Address (MAC Address).
2.1.7	ifAdminStatus	The desired state of the interface.
2.1.8	ifOperStatus	The current operational state of the interface.
2.1.9	ifLastChange	The value of sysUpTime at the time the interface entered its current operational state (up or down).
2.1.10	ifInOctets	The number of Octets received.
2.1.11	ifInUcastPkts	The number of Unicast Packets delivered to a higher-layer protocol.
2.1.12	ifInNUcastPkts	The number of Non Unicast Packets delivered to a higher-layer protocol.
2.1.14	ifInErrors	The number of inbound Packets that contained errors.
2.1.15	ifInUnKnownProtos	The number of Packet received which are discarded because of an unknown/unsupported protocol.

Object ID	Item	Description
2.1.16	ifOutOctets	The number of Octets transmitted.
2.1.17	ifOutUcastPkts	The number of Unicast Packets which are received from upper protocol.
2.1.18	ifOutNUcastPkts	The number of Non Unicast Packets which are received from upper protocol.
2.1.21	ifOutQLen	The length of the output packet queue (in packets).
2.1.22	ifSpecific	Relevant MIB object identifier.

IP Group (1.3.6.1.2.1.4)

Object ID	Item	Description
1	ipForwarding	The value which indicates operation availability as a router (whether Datagram is transferred or not).
2	ipDefaultTTL	Default value for IP Packet TTL (Time to Live).
3	ipInReceives	The total number of Packets received (including packet received in error).
4	ipnHdrErrors	The number of Packets discarded due to errors in their header.
5	ipInAddrError	The number of Packets discarded because IP Address of the destination was invalid.
7	ipInUnknownProtos	The number of Packets discarded because the protocol was unknown/unsupported.
8	ipInDiscards	The number of incoming Packets discarded because of an insufficient reception buffer.
9	ipInDelivers	The total number of Packets received (including ICMP) normally.
10	ipOutRequests	The total number of IP Packets (ICMP) which are tried to be transmitted (relay Packet is not included).
13	ipReasmTimeout	The maximum number of seconds required in the buffer to rebuild a fragmented Packet.
14	ipReasmReqds	The number of Packets that required rebuilding from a fragmented state.
15	ipReasmOKs	The number of Packets that were rebuilt correctly from a fragmented state.
16	ipReasmFails	The number of Packets that could not be rebuilt correctly from a fragmented state.
17	ipFragOKs	The number of Packets that were fragmented correctly.
18	ipFragFails	The number of Packets that could not be fragmented correctly.
19	ipFragCreates	The number of IP datagrams created due to fragmentation.

Object ID	Item	Description
20	ipAddrTable (NA)	Management Table of addressing information relevant to this entity's IP addresses.
20.1	IpAddrEntry (NA)	Components of ipAddrTable.
20.1.1	IpAdEntAddr	IP Address.
20.1.2	IpAdEntIfindex	Index value of the Interface which is assigned to IP address.
20.1.3	IpAdEntNetMask	The Subnet Mask associated with IP address.
20.1.4	ipAdEntBcastAddr	Broadcast Address Value associated with IP Address.
20.1.5	IpAdEntReasmMaxSize	The size of the largest IP Datagram which can be sent/ received through IP Address.

ICMP Group (1.3.6.1.2.1.5)

Object ID	Item	Description
1	cmpInMsgs	The total number of ICMP messages received (excluded, with error).
2	icmpInErrors	The total number of ICMP messages received which contained error.
8	icmpInEchos	The total number of ICMP echo request messages received.
9	icmpInEchoReps	The total number of ICMP echo answering messages received.
14	icmpOutMsgs	The number of ICMP messages which were sent.
15	icmpOutErrors	The number of ICMP messages which were not sent because of error.
21	icmpOutEchos	The number of ICMP Echo request messages sent.
22	icmpOutEchoReps	The number of ICMP Echo Reply messages sent.

TCP Group (1.3.6.1.2.1.6)

Object ID	Item	Description
1	tcpRtoAlgorithm	The algorithm used to determine the timing of retransmitting when a response was unacknowledged.
2	tcpRtoMin	Minimum value permitted for retransmission timeout (in milliseconds).
3	tcpRtoMax	Maximum value permitted for retransmission timeout (in milliseconds).
4	tcpMaxConn	Maximum number of TCP connections which can be supported.
5	tcpActiveOpens	The total number of Active open TCP connections.
6	tcpPassiveOpens	The total number of Passive open TCP connections.

Object ID	Item	Description
7	tcpAttemptFails	The total number of connections error.
8	tcpEstabResets	The total number of resets.
10	tcpInSegs	The total number of segments received.
11	tcpOutSegs	The total number of segments sent.
12	tcpRetransSegs	The total number of segments retransmitted.
14	tcpInErrs	The total number of segments received in error.
15	tcpOutRsts	The total number of TCP segments sent containing the RST flag (reset connection).

UDP Group (1.3.6.1.2.7)

Object ID	Item	Description
1	udpInDatagrams	The total number of UDP Datagrams received.
2	udpNoPorts	The total number of received UDP Datagrams for which there was no application at the destination port.
3	udpInError	The total number of received UDP Datagrams which contained error.
4	udpOutDatagrams	The total number of UDP Datagrams sent.

SNMP Group (1.3.6.1.2.1.11)

Object ID	Item	Description
1	snmpInPkts	The total number of SNMP messages received.
2	snmpOutPkts	The total number of SNMP messages sent.
3	snmpInBadVersions	The total number of received SNMP messages of which version is unsupported.
4	snmpInBadCommunityNames	The total number of SNMP messages with unknown Community Name.
6	snmpInASNParseErrs	The total number of SNMP messages with incorrect OID type.
13	snmpInTotalReqVars	The total number of Objects which have been retrieved value successfully.
15	snmpInGetRequests	The total number of Get-Request which have been accepted and processed (e.g. Data extract by using snmpget/snmpwalk command).
16	snmpInGetNexts	The total number of Get-Next which have been accepted and processed (for at the time of following a layer-tree by using snmpwalk command).
20	snmpOutTooBigs	The total number of sent SNMP messages which returned an error of "TooBig".

Object ID	Item	Description
21	snmpOutNoSuchNames	The total number of sent SNMP messages which returned an error of "NoSuchName".
24	snmpOutGenErrs	The total number of sent SNMP messages which returned an error of "GenErr".
28	snmpOutGetResponses	The total number of GetResponse sent.
29	snmpOutTraps	The total number of TRAP sent.
30	snmpEnableAuthenTraps	Indicates whether the SNMP agent process is permitted to generate authentication failure traps.

21.4 Revision History

21.4.1 KX-NCP500/KX-NCP1000 PBMPR Software File Version 1.01xx

Changed Contents

- 14.1.2 Quick Setup
- 19.1.4 Voice Mail DPT (Digital) Integration

21.4.2 KX-NCP500/KX-NCP1000 PBMPR Software File Version 2.02xx

New Contents

- 13.1.27 PS (Portable Station)
  IP Cell Station

Changed Contents

- 3.1.1 CA (Communication Assistant)
- 3.1.25 CTI (Computer Telephony Integration)
- 4.1.8 DISA (Direct Inward System Access)
  – Walking COS Through DISA
  – DISA Call Transfer from Outside Destination
- 6.1.4 Flexible Numbering/Fixed Numbering
  Added support for SIP extensions
- 11.1.4 Music on Hold
  OGM features added
- 12.1.2 OGM (Outgoing Message)
  BGM and Music on Hold features added
- 16.1.2 SIP (Session Initiation Protocol) Extension
- 16.1.4 SMDR (Station Message Detail Recording)
- 21.1 Capacity of System Resources
  System capacity for PT call logs increased
- 21.2 Tones/Ring Tones
  Cyclic Tone deleted

21.4.3 KX-NCP500/KX-NCP1000 PBMPR Software File Version 4.1xxx

New Contents

- 3.1.11 Call Transfer
  Transfer to Busy Extension using Queuing (Camp-on Transfer)
- 3.1.20 Conference Group Call
- 6.1.6 FWD (Call Forwarding)
  Parallel Ringing When Forwarding to CO Line
- 8.1.1 Hands-free Answerback
  Class of Service (COS) with Hands-free Answerback
- 13.1.15 PRIVATE NETWORK FEATURES
  Override using an Itemized Billing Code for ARS
- 13.1.25 Private Network Features—QSIG—Enhanced Features
- 13.1.26 Private Network Features—VoIP (Voice over Internet Protocol)
  – Automatic Rerouting of VoIP Calls to Public CO lines using ARS
  – Common Extension Numbering for Multiple PBXs

Changed Contents

- 3.1.25 CTI (Computer Telephony Integration)
- 13.1.5 PC Console/PC Phone
- 13.1.16 Private Network Features—Centralized Voice Mail
  Voice Mail (VM) Transfer button support for remote VPSs added
- 13.1.18 Private Network Features—Network ICD Group
  UCD and Hunt call distribution support added
- 13.1.23 Private Network Features—QSIG—CLIP/COLP (Calling/Connected Line Identification Presentation) and CNIP/CONP (Calling/Connected Name Identification Presentation)
- 16.1.9 SVM (Simplified Voice Message)
- 19.1.4 Voice Mail DPT (Digital) Integration
  Voice Mail (VM) Transfer button features

21.4.4 KX-NCP500/KX-NCP1000 PBMPR Software File Version 4.2xxx

New Contents

- 13.1.28 PS—CO Status Display (KX-WT125/KX-WT126 only)

Changed Contents

- 3.1.6 Call Log, Incoming
  Log settings for calls not answered by the called extension

- 16.1.2 SIP (Session Initiation Protocol) Extension
  Added support for SIP video phone calls

21.4.5 KX-NCP500/KX-NCP1000 PBMPR Software File Version 5.0xxx

New Contents

- 5.1.3 Executive Busy Override
  One-touch Executive Busy Override

- 16.1.3 SIP Refer Transfer

- 19.1.4 Voice Mail DPT (Digital) Integration
  Automatic two-way recording into the VPS

Changed Contents

- 3.1.6 Call Log, Incoming
  Log settings for calls answered by ICD group's forward/overflow destination

- 3.1.16 CLIP (Calling Line Identification Presentation)
  Clarified the CLIP information that is sent when calls are forwarded to a VPS

- 3.1.20 Conference Group Call
  Broadcast Mode

- 9.1.6 ICD Group Features—Queuing
  DISA AA settings assigned to an OGM are available to callers

- 14.1.2 Quick Setup
  Added new programming items when an analog CO line card is present

- 16.1.2 SIP (Session Initiation Protocol) Extension
  Extended the available features

- 16.1.4 SMDR (Station Message Detail Recording)
  Record emergency call as soon as it is dialed

- 17.1.3 Tenant Service
  Method for assigning ARS to tenants

- 19.1.4 Voice Mail DPT (Digital) Integration
  PBX can send mailbox number of ICD Group when an overflow call is sent to the VPS

- 20.1.3 Walking Extension, Enhanced
  Service-out mode

21.4.6 KX-NCP500/KX-NCP1000 PBMPR Software File Version 6.0xxx

New Contents

- 3.1.4 Caller Information before Executive Busy Override or Call Monitor

Changed Contents

- 3.1.9 Call Pickup
  Caller Information Display before Call Pickup

- 9.1.5 ICD Group Features—Overflow

21.4.7 KX-NCP500/KX-NCP1000 PBMPR Software File Version 7.xxxx

Changed Contents

- 3.1.6 Call Log, Incoming

- 3.1.14 CELLULAR PHONE FEATURES

- 3.1.16 CLIP (Calling Line Identification Presentation)

- 3.1.20 Conference Group Call

- 4.1.8 DISA (Direct Inward System Access)
  DISA Automatic Walking COS
  DISA Call Transfer from Outside Destination

- 6.1.1 Fixed Buttons

- 8.1.3 Headset Operation

- 9.1.13 Intercom Call

- 9.1.15 IP-PT (IP Proprietary Telephone)
- 13.1.8 Peer-to-Peer Connection
- 13.1.31 PS—Ring Group
- 15.1.1 Redial, Last Number
- 16.1.1 Self Labeling (KX-NT366/KX-NT560)
- 16.1.8 Speed Dialing, System
- 17.1.3 Tenant Service

21.4.8 KX-TDE100/KX-TDE200 PMMPR Software File Version 2.0xxx

New Contents

- 13.1.16 Private Network Features—Centralized Voice Mail PBX Code Method

Changed Contents

- 4.1.6 DID (Direct Inward Dialing)
- 4.1.8 DISA (Direct Inward System Access)
- 12.1.2 OGM (Outgoing Message)
- 16.1.9 SVM (Simplified Voice Message)
- 21.1 Capacity of System Resources

21.4.9 KX-TDE100/KX-TDE200 PMMPR Software File Version 2.01xx

New Contents

- 9.1.15 IP-PT (IP Proprietary Telephone) Automatic Rerouting to Secondary PBX

Changed Contents

- 3.1.11 Call Transfer Transfer Recall for Call Transfer without Announcement
- 3.1.25 CTI (Computer Telephony Integration) KX-DT300 series DPT compatibility

- 6.1.4 Flexible Numbering/Fixed Numbering
  KX-HGT100 Feature Numbers

- 13.1.2 Paralleled Telephone
  Bluetooth compatibility

- 16.1.2 SIP (Session Initiation Protocol) Extension
  KX-HGT100 compatibility

21.4.10 KX-TDE100/KX-TDE200 PMMPR Software File Version 3.0xxx

New Contents

- 3.1.1 CA (Communication Assistant)

- 13.1.15 PRIVATE NETWORK FEATURES
  - Override using an Itemized Billing Code for ARS
  - Common Extension Numbering for Multiple PBXs

- 13.1.27 PS (Portable Station)
  - IP Cell Station

Changed Contents

- 2.1.1 BGM (Background Music)
  Added support for OGMs

- 3.1.16 CLIP (Calling Line Identification Presentation)

- 3.1.25 CTI (Computer Telephony Integration)

- 4.1.8 DISA (Direct Inward System Access)
  - Walking COS Through DISA
  - DISA Call Transfer from Outside Destination

- 6.1.4 Flexible Numbering/Fixed Numbering
  Added support for SIP extensions

- 11.1.4 Music on Hold
  Added support for OGMs

- 9.1.11 Intercept Routing

- 12.1.2 OGM (Outgoing Message)
  Music on Hold and BGM features added

- 13.1.5 PC Console/PC Phone

- 14.1.2 Quick Setup
  Updated for the latest software version
- 15.1.3 Room Status Control
- 16.1.2 SIP (Session Initiation Protocol) Extension
- 16.1.9 SVM (Simplified Voice Message)
- 21.1 Capacity of System Resources
- 21.2 Tones/Ring Tones
  Tone (for Music on Hold) deleted

21.4.11 KX-TDE100/KX-TDE200 PMMPR Software File Version 4.1xxx

New Contents

- 3.1.11 Call Transfer
  Transfer to Busy Extension using Queuing (Camp-on Transfer)
- 3.1.20 Conference Group Call
- 6.1.6 FWD (Call Forwarding)
  Parallel Ringing When Forwarding to CO Line
- 8.1.1 Hands-free Answerback
  Class of Service (COS) with Hands-free Answerback
- 13.1.25 Private Network Features—QSIG—Enhanced Features
- 13.1.26 Private Network Features—VoIP (Voice over Internet Protocol)
  Automatic Rerouting of VoIP Calls to Public CO lines using ARS

Changed Contents

- 13.1.16 Private Network Features—Centralized Voice Mail
  Voice Mail (VM) Transfer button support for remote VPSs added
- 13.1.18 Private Network Features—Network ICD Group
  UCD and Hunt call distribution support added
- 19.1.4 Voice Mail DPT (Digital) Integration
  Voice Mail (VM) Transfer button features

21.4.12 KX-TDE100/KX-TDE200 PMMPR Software File Version 4.2xxx

New Contents

- 13.1.28 PS—CO Status Display (KX-WT125/KX-WT126 only)

Changed Contents

- 3.1.6 Call Log, Incoming
  Log settings for calls not answered by the called extension

- 16.1.2 SIP (Session Initiation Protocol) Extension
  Added support for SIP video phone calls

21.4.13 KX-TDE100/KX-TDE200 PMMPR Software File Version 5.0xxx

New Contents

- 5.1.3 Executive Busy Override
  One-touch Executive Busy Override

- 16.1.3 SIP Refer Transfer

- 19.1.4 Voice Mail DPT (Digital) Integration
  Automatic two-way recording into the VPS

Changed Contents

- 3.1.6 Call Log, Incoming
  Log settings for calls answered by ICD group's forward/overflow destination

- 3.1.16 CLIP (Calling Line Identification Presentation)
  Clarified the CLIP information that is sent when calls are forwarded to a VPS

- 3.1.20 Conference Group Call
  Broadcast Mode

- 9.1.6 ICD Group Features—Queuing
  DISA AA settings assigned to an OGM are available to callers

- 14.1.2 Quick Setup
  Added new programming items when an analog CO line card is present

- 16.1.2 SIP (Session Initiation Protocol) Extension
  Extended the available features

- 16.1.4 SMDR (Station Message Detail Recording)
  Record emergency call as soon as it is dialed

- 17.1.3 Tenant Service
  Method for assigning ARS to tenants
- 19.1.4 Voice Mail DPT (Digital) Integration
  PBX can send mailbox number of ICD Group when an overflow call is sent to the VPS
- 20.1.3 Walking Extension, Enhanced
  Service-out mode

21.4.14 KX-TDE100/KX-TDE200 PMMPR Software File Version 6.0xxx

New Contents

- 3.1.4 Caller Information before Executive Busy Override or Call Monitor

Changed Contents

- 3.1.9 Call Pickup
  Caller Information Display before Call Pickup
- 9.1.5 ICD Group Features—Overflow

21.4.15 KX-TDE100/KX-TDE200 PMMPR Software File Version 7.xxxx

Changed Contents

- 3.1.6 Call Log, Incoming
- 3.1.14 CELLULAR PHONE FEATURES
- 3.1.16 CLIP (Calling Line Identification Presentation)
- 3.1.20 Conference Group Call
- 4.1.8 DISA (Direct Inward System Access)
  DISA Automatic Walking COS
  DISA Call Transfer from Outside Destination
- 6.1.1 Fixed Buttons
- 8.1.3 Headset Operation
- 9.1.13 Intercom Call

- 9.1.15 IP-PT (IP Proprietary Telephone)
- 13.1.8 Peer-to-Peer Connection
- 13.1.31 PS—Ring Group
- 15.1.1 Redial, Last Number
- 16.1.1 Self Labeling (KX-NT366/KX-NT560)
- 16.1.8 Speed Dialing, System
- 17.1.3 Tenant Service

21.4.16 KX-TDE600 PGMPR Software File Version 3.0xxx

New Contents

- 3.1.1 CA (Communication Assistant)
- 13.1.15 PRIVATE NETWORK FEATURES
  - Override using an Itemized Billing Code for ARS
  - Common Extension Numbering for Multiple PBXs
- 13.1.27 PS (Portable Station)
  - IP Cell Station

Changed Contents

- 2.1.1 BGM (Background Music)
  Added support for OGMs
- 3.1.16 CLIP (Calling Line Identification Presentation)
- 3.1.25 CTI (Computer Telephony Integration)
- 4.1.8 DISA (Direct Inward System Access)
  - Walking COS Through DISA
  - DISA Call Transfer from Outside Destination
- 6.1.4 Flexible Numbering/Fixed Numbering
  Added support for SIP extensions
- 11.1.4 Music on Hold
  Added support for OGMs
- 12.1.2 OGM (Outgoing Message)
  Music on Hold and BGM features added
- 13.1.5 PC Console/PC Phone

- 14.1.2 Quick Setup
  Updated for the latest software version
- 16.1.2 SIP (Session Initiation Protocol) Extension
- 16.1.9 SVM (Simplified Voice Message)
- 21.1 Capacity of System Resources
- 21.2 Tones/Ring Tones
  Tone (for Music on Hold) deleted

21.4.17 KX-TDE600 PGMPR Software File Version 4.1xxx

New Contents

- 3.1.11 Call Transfer
  Transfer to Busy Extension using Queuing (Camp-on Transfer)
- 3.1.20 Conference Group Call
- 6.1.6 FWD (Call Forwarding)
  Parallel Ringing When Forwarding to CO Line
- 8.1.1 Hands-free Answerback
  Class of Service (COS) with Hands-free Answerback
- 13.1.25 Private Network Features—QSIG—Enhanced Features
- 13.1.26 Private Network Features—VoIP (Voice over Internet Protocol)
  Automatic Rerouting of VoIP Calls to Public CO lines using ARS

Changed Contents

- 13.1.16 Private Network Features—Centralized Voice Mail
  Voice Mail (VM) Transfer button support for remote VPSs added
- 13.1.18 Private Network Features—Network ICD Group
  UCD and Hunt call distribution support added
- 19.1.4 Voice Mail DPT (Digital) Integration
  Voice Mail (VM) Transfer button features

21.4.18 KX-TDE600 PGMPR Software File Version 4.2xxx

New Contents

- 13.1.28 PS—CO Status Display (KX-WT125/KX-WT126 only)

Changed Contents

- 3.1.6 Call Log, Incoming
  Log settings for calls not answered by the called extension

- 16.1.2 SIP (Session Initiation Protocol) Extension
  Added support for SIP video phone calls

21.4.19 KX-TDE600 PGMPR Software File Version 5.0xxx

New Contents

- 5.1.3 Executive Busy Override
  One-touch Executive Busy Override

- 16.1.3 SIP Refer Transfer

- 19.1.4 Voice Mail DPT (Digital) Integration
  Automatic two-way recording into the VPS

Changed Contents

- 3.1.6 Call Log, Incoming
  Log settings for calls answered by ICD group's forward/overflow destination

- 3.1.16 CLIP (Calling Line Identification Presentation)
  Clarified the CLIP information that is sent when calls are forwarded to a VPS

- 3.1.20 Conference Group Call
  Broadcast Mode

- 9.1.6 ICD Group Features—Queuing
  DISA AA settings assigned to an OGM are available to callers

- 14.1.2 Quick Setup
  Added new programming items when an analog CO line card is present

- 16.1.2 SIP (Session Initiation Protocol) Extension
  Extended the available features

- 16.1.4 SMDR (Station Message Detail Recording)
  Record emergency call as soon as it is dialed

- 17.1.3 Tenant Service
  Method for assigning ARS to tenants

- 19.1.4 Voice Mail DPT (Digital) Integration
  PBX can send mailbox number of ICD Group when an overflow call is sent to the VPS

- 20.1.3 Walking Extension, Enhanced
  Service-out mode

21.4.20 KX-TDE600 PGMPR Software File Version 6.0xxx

New Contents

- 3.1.4 Caller Information before Executive Busy Override or Call Monitor

Changed Contents

- 3.1.9 Call Pickup
  Caller Information Display before Call Pickup
- 9.1.5 ICD Group Features—Overflow

21.4.21 KX-TDE600 PGMPR Software File Version 7.xxxx

Changed Contents

- 3.1.6 Call Log, Incoming
- 3.1.14 CELLULAR PHONE FEATURES
- 3.1.16 CLIP (Calling Line Identification Presentation)
- 3.1.20 Conference Group Call
- 4.1.8 DISA (Direct Inward System Access)
  DISA Automatic Walking COS
  DISA Call Transfer from Outside Destination
- 6.1.1 Fixed Buttons
- 8.1.3 Headset Operation
- 9.1.13 Intercom Call
- 9.1.15 IP-PT (IP Proprietary Telephone)
- 13.1.8 Peer-to-Peer Connection
- 13.1.31 PS—Ring Group
- 15.1.1 Redial, Last Number
- 16.1.1 Self Labeling (KX-NT366/KX-NT560)
- 16.1.8 Speed Dialing, System
- 17.1.3 Tenant Service

Index

A

AA → Automated Attendant 87, 372
Absent Message 14
Account Code Entry 15
Alarm Information, Local 190
Alternate Calling—Ring/Voice 178
Alternate Receiving/Calling Mode (Ring/Voice) Override 142
Alternate Receiving—Ring/Voice 178
Appendix 389
ARS → Automatic Route Selection 16
Attended Transfer (SIP Refer) 310
Authorization Code 21
Automated Attendant (AA) 87, 372
Automatic Call Hold 41
Automatic Call Park 47
Automatic Call Waiting 54
Automatic Callback Busy (Camp-on) 22
Automatic Extension Release 23
Automatic Fax Transfer 23
Automatic Log-out 158
Automatic Number Identification (ANI) 35
Automatic Privacy 234
Automatic Redial 302
Automatic Rerouting of VoIP Calls to Public CO Lines 284
Automatic Rerouting to Secondary PBX 182
Automatic Route Selection (ARS) 16
Automatic Station Release → Automatic Extension Release 23
Automatic Time Adjustment 25

B

Background Music (BGM) 28, 201
BGM → Background Music 28, 201
BGM—External 28
Blind Transfer (SIP Refer) 310
Bluetooth Module 181
Boss & Secretary feature 130
Busy on Busy 162
Busy Override Deny, Executive 103
Busy Override, Executive 103
Busy Station Signaling (BSS) → Call Waiting 54
Buttons, Fixed 114
Buttons, Flexible 117

C

CA (Communication Assistant) 32
Call Directory—Extension Dialing 178
Call Directory—Speed Dialing 323
Call Distribution Port Group 33
Call Forwarding (FWD) 127
Call Forwarding—QSIG (CF—QSIG) 275
Call Hold 40
Call Hold Retrieve Deny 41
Call Hold, Automatic 41
Call Log, Incoming 43
Call Log, Outgoing 302
Call Monitor 46
Call Park 47
Call Park Recall 47
Call Park Retrieve Deny 48
Call Pickup 48
Call Pickup Group 49, 50, 136
Call Pickup, Directed 49
Call Splitting 51
Call Transfer 51
Call Transfer with Announcement 51
Call Transfer without Announcement 51
Call Transfer—QSIG (CT—QSIG) 278
Call Transfer—Screened → Call Transfer with Announcement 51
Call Transfer—Unscreened → Call Transfer without Announcement 51
Call Waiting Caller ID (Visual Caller ID) 55
CALL WAITING FEATURES 54
Call Waiting Tone 56
Callback Busy, Automatic (Camp-on) 22
Caller ID 34
Caller Information before Executive Busy Override or Call Monitor 40
Caller Information Display before Call Pickup 48
Calling Line Identification (CLI) Distribution 58, 170
Calling Line Identification Presentation (CLIP) 34, 59
Calling Line Identification Presentation (CLIP)—QSIG 276
Calling Line Identification Restriction (CLIR) 60
Calling Line Identification Restriction (CLIR)—QSIG 277
Calling Name Identification Presentation (CNIP)—QSIG 276
Calling Name Identification Restriction (CNIR)—QSIG 277
Calling Party Control (CPC) Signal Detection 72
Capacity of System Resources 390
Carrier Access Code, Special 321
CCBS—QSIG → Completion of Calls to Busy Subscriber—QSIG 274
CDPG → Call Distribution Port Group 33
CELLULAR PHONE FEATURES 57
Cellular Phone XDP Parallel 159
Centralized Voice Mail 259
CF—QSIG → Call Forwarding—QSIG 275
Circular Hunting 169
Class of Service (COS) 71
CLI → Calling Line Identification Distribution 58, 170
CLIP → Calling Line Identification Presentation 34, 59
CLIP—QSIG → Calling Line Identification Presentation—QSIG 276
CLIR → Calling Line Identification Restriction 60
CLIR—QSIG → Calling Line Identification Restriction—QSIG 277
CNIP—QSIG → Calling Name Identification Presentation—QSIG 276
CNIR—QSIG → Calling Name Identification Restriction—QSIG 277
CO Line Access 61
CO Line Call Limitation 63
Code Entry, Verified 358
COLP → Connected Line Identification Presentation 59
COLP—QSIG → Connected Line Identification Presentation—QSIG 276
COLR → Connected Line Identification Restriction 60
COLR—QSIG → Connected Line Identification Restriction—QSIG 277
Completion of Calls to Busy Subscriber (CCBS)—QSIG 274

Computer Telephony Integration (CTI) 73
Conference 65
Conference Group 67
Conference Group Call 66
Confirmation Tone 70
Connected Line Identification Presentation (COLP) 59
Connected Line Identification Presentation (COLP)—QSIG 276
Connected Line Identification Restriction (COLR) 60
Connected Line Identification Restriction (COLR)—QSIG 277
Connected Name Identification Presentation (CONP)—QSIG 276
Connected Name Identification Restriction (CONR)—QSIG 277
CONP—QSIG → Connected Name Identification Presentation—QSIG 276
CONR—QSIG → Connected Name Identification Restriction—QSIG 277
Consultation Hold 71
COS → Class of Service 71
CO-to-CO Line Call Duration 64
CPC → Calling Party Control Signal Detection 72
CTI → Computer Telephony Integration 73
CT—QSIG → Call Transfer—QSIG 278

D

Data Line Security 76
Delayed Ringing 154
Denied Code Tables 347
DHCP (Dynamic Host Configuration Protocol) Assignment 76
DHCP → Dynamic Host Configuration Protocol 76
Dial Mode Selection 77
Dial Tone 77
Dial Tone Transfer 79
Dialing Digit Restriction during Conversation 64
Dialing, One-touch 210
DID → Direct Inward Dialing 80, 170
Digital XDP 217
DIL → Direct In Line 82, 170
Direct CO Line Access 62
Direct In Line (DIL) 82, 170
Direct Inward Dialing (DID) 80, 170
Direct Inward System Access (DISA) 84
Direct Recording 327
Directed Call Pickup 48
Directory, Call—Extension Dialing 178
Directory, Call—Speed Dialing 323
DISA → Direct Inward System Access 84
DISA AA Service → DISA Built-in Automated Attendant Number 87
DISA Automatic Walking COS 89
DISA Intercept Routing—Busy 88
DISA Intercept Routing—DND 89
DISA Intercept Routing—No Answer 89
DISA Intercept Routing—No Dial 87
DISA Security Mode 88
Display Information 95
Display Lock 44, 322, 329
Distribution, Group Call 153
DND → Do Not Disturb 96
DND Override 97
DND, Paging 97, 215
Do Not Disturb (DND) 96
Door Open 97
Doorphone Call 98

E

EFA → External Feature Access 102
Electronic Station Lockout → Extension Dial Lock 104
Emergency Call 103
Enhanced Walking Extension 382
Exception Code Tables 348
Exclusive Call Hold 41
Executive Busy Override 103
Executive Busy Override Deny 103
Extension Dial Lock 104
Extension Feature Clear 105
Extension PIN (Personal Identification Number) 106
Extension PIN Lock 107
Extension Port Configuration 108
Extension Release, Automatic 23
Extension User Group 136
Extension-to-CO Line Call Duration 64
External Feature Access (EFA) 102
External Relay 109
External Sensor 110
EXtra Device Port (XDP) 108

F

Fax Transfer, Automatic 23
Feature Clear, Extension 105
Fixed Buttons 114
Fixed Numbering 120
Flash/Recall/Terminate 116
Flexible Buttons 117
Flexible Numbering/Fixed Numbering 120
Floating Extension 126
Floating Station → Floating Extension 126
Full One-touch Dialing 210
FWD → Call Forwarding 127
FWD, Multiple 129
FWD/DND Button, Group FWD Button 131
FWD/DND Setting by Fixed FWD/DND button 132
FWD—All Calls 127
FWD—Busy 127
FWD—Busy/No Answer 127
FWD—Follow Me 127
FWD—No Answer 127

G

Gateway Groups 283
Group Call Distribution 153
Group Call Pickup 48
GROUP FEATURES 136
Group FWD Button Types 132
Group, Call Distribution Port 33
Group, Call Pickup 48, 136
Group, Conference 67
Group, Extension User 136
Group, Idle Extension Hunting 137, 168

Group, Incoming Call Distribution 137
Group, Paging 137, 214
Group, PS Ring 138, 290
Group, Trunk 136
Group, Voice Mail (VM) 138, 361

H

Handover 287
Handset/Headset Selection → Headset Operation 143
Hands-free Answerback 142
Hands-free Operation 143
Headset Operation 143
Hold Recall 41
Hold Retrieve Deny, Call 41
Hold, Call 40
Hold, Exclusive Call 41
Host PBX Access Code (Access Code to the Telephone Company from a Host PBX) 145
Hot Line 147
Hotel Operator 305
Hunting, Circular 169
Hunting, Idle Extension 168
Hunting, Priority 154
Hurry-up Transfer → Manual Queue Redirection 164

I

ICD Group → Incoming Call Distribution Group 137, 150
Idle Extension Hunting 168
Idle Extension Hunting Group 137, 168
Idle Line Access (Local Access) 62
Idle Line Preference 189
Incoming Call Distribution Group 137
INCOMING CALL FEATURES 170
Incoming Call Log 43
Incoming Call Queue Monitor 166
Integrated Services Digital Network (ISDN) 182
Intercept Routing 173
Intercept Routing, DISA—Busy 88
Intercept Routing, DISA—DND 89
Intercept Routing, DISA—No Answer 89
Intercept Routing, DISA—No Dial 87
Intercept Routing—Busy 173
Intercept Routing—DND 173, 174
Intercept Routing—No Answer (IRNA) 173
Intercept Routing—No Destination 177
Intercept Routing—Overflow in an Incoming Call Distribution Group 161
Intercom Call 178
Internal Call Block 179
Interrupt Redial 302
IP Cell Station 288
IP-PT (IP Proprietary Telephone) 181
IP-PT → IP Proprietary Telephone 181
IRNA → Intercept Routing—No Answer 173
ISDN → Integrated Services Digital Network) 182
Itemized Billing Code 21

L

LCS → Live Call Screening 368
LED Indication 186, 226
Line Preference Override 190
Line Preference—Incoming 188
Line Preference—Outgoing 189
Live Call Screening (LCS) 368
Local Alarm Information 190
Lock, Display 44, 322, 329
Lock, Extension Dial 104
Lock, Extension PIN 107
Lock, Remote Extension Dial 104
Log-in/Log-out 156
Log-in/Log-out Monitor 158

M

Making Calls with an SDN Button 225
Manager Features 194
Manual Queue Redirection 164
Message Waiting 197
Message, Absent 14
Message, Outgoing (OGM) 206
Message, Printing 233
Modem—On-site/Remote Programming 223
Monitor, Call 46
Multiple FWD 129
Multiple VPSs 262
Music on Hold 201
Music, Background (BGM) 28
Mute 203

N

NDSS → Network Direct Station Selection 264
Network Direct Station Selection (NDSS) 264
Network ICD Group 269
No Line Preference 188, 189
Numbering, Flexible/Fixed 120

O

Off-hook Call Announcement (OHCA) 209
Off-hook Monitor 206
OGM → Outgoing Message 206
OHCA → Off-hook Call Announcement 209
OHCA, Whisper 383
One-touch Dialing 210
One-touch Dialing, Full 210
One-touch Transfer 53
On-site Programming 223
Operator Call 211
Operator Features 210
Operator, Hotel 305
Outgoing Call Log 302
Outgoing Message (OGM) 206
Outside Destinations in Incoming Call Distribution Group 159
Overflow 161

P

Paging 214
Paging Deny 214
Paging DND 97, 215
Paging Group 137, 214
Paralleled Telephone 216

Password Security 219
Pause Insertion 220
PC Console/PC Phone 221
PC Programming 222
PDN → Primary Directory Number 225
Peer-to-Peer Connection 230
Personal Identification Number (PIN), Extension 106
Personal Identification Number (PIN), Verification Code 358
Personal Speed Dialing 322
Pickup Dialing → Hot Line 147
Pickup, Group Call 49, 50, 136
PIN → Extension Personal Identification Number 106
PIN → Verification Code Personal Identification Number 358
PIN Lock, Extension 107
PING (Packet Internet Groper) Confirmation 231
PING → Packet Internet Groper 231
Port Configuration, Extension 108
Portable Station (PS) 287
Power Failure Connections 232
Power Failure Restart 231
Power Failure Transfer 232
Predialing 233
Primary Directory Number (PDN) 225
Prime Line Preference 189, 190
Printing Message 233
Priority Hunting 154
Privacy Release 234
PRIVATE NETWORK FEATURES 235
Programming, PC 222
Programming, PT 294
PS (Portable Station) 287
PS Ring Group 138
PS Roaming by Network ICD Group 271
PS—CO Status Display (KX-WT125/KX-WT126 only) 289
PS—Directory 289
PS—Feature Buttons 290
PS—Ring Group 290
PT Programming 294
Pulse to Tone Conversion 77

Q

QSIG 272
QSIG—Enhanced Features 279
Queue Redirection, Manual 164
Queuing 163
Quick Dialing 298
Quick Setup 298

R

Recall 116
Recording into the VPS, Two-way 368
Recording, Direct 327
Redial, Automatic 302
Redial, Interrupt 302
Redial, Last Number 302
Refer Transfer (SIP) 310
Relay, External 109
Remote Control 166
Remote Extension Dial Lock 105
Remote Programming 223
Remote Station Lock Control → Remote Extension Dial Lock 105
Remote Wake-up Call 341
Revision History 402
Ring 154
Ring Tone Pattern Selection 303
Ringing Line Preference 189
Room Status Control 305
Route Selection, Automatic (ARS) 16

S

S-CO Line Access 62
Screening, Live Call (LCS) 368
SDN → Secondary Directory Number 225
SDN Direct Dial 225
SDN Walking COS 225
Secondary Directory Number (SDN) 225
Security Mode, DISA 88
Self Labeling (KX-NT366/KX-NT560) 308
Sending Faxes Through the Network 285
Sensor, External 110
Service-out mode 382
Simple Network Time Protocol (SNTP) 25
Simplified Voice Message (SVM) 324
SIP (Session Initiation Protocol) Extension 309
SIP Refer Transfer 310
SMDR → Station Message Detail Recording 311
SNMP (Simple Network Management Protocol) System Monitor 319
SNMP → Simple Network Management Protocol 319
SNTP → Simple Network Time Protocol 25
Software Upgrading 356
Special Carrier Access Code 321
Speed Dialing, Personal 322
Speed Dialing, System 323
Splitting, Call 51
Station Hunting → Idle Extension Hunting 168
Station Message Detail Recording (SMDR) 311
Station Password Lock → Extension PIN Lock 107
Station Program Clear → Extension Feature Clear 105
Station Speed Dialing → Personal Speed Dialing 322
Supervisory 166
Supported Management Information Base (MIB) Table 397
SVM → Simplified Voice Message 324
SVM Log 327
Syslog Record Management 330
System Speed Dialing 323

T

T.38 protocol 285
T1 Line Service 334
TAFAS → Trunk Answer From Any Station 335
Tenant Service 336
Tenant-to-Tenant Call Block 337
Terminate 116
Terminated Hunting 169
TIE Line 235
Time Service 342
Timed Reminder 341
Toll Restriction (TRS) 346

Tone, Call Waiting 56
Tone, Confirmation 70
Tone, Dial 77
Tones/Ring Tones 395
Transfer Recall 51
Transfer, Call 51
Transfer, One-touch 53
Transfer, SIP Refer 310
TRAP Implementation 320
TRS → Toll Restriction 346
TRS Level 348
TRS Override by System Speed Dialing 348
Trunk Answer From Any Station (TAFAS) 335
Trunk Group 136
Trunk Group Access 62
Two-way Recording into the VPS 368

U

UCD → Uniform Call Distribution 154
Unattended Conference 65
Uniform Call Distribution (UCD) 154
Upgrading the Software 356

V

Verification Code Entry 358
Verification Code Personal Identification Number (PIN) 358
VIP Call 167
Virtual Locations 383
Virtual PS 359
Voice Mail (VM) Group 138, 361
Voice Mail DPT (Digital) Integration 364
Voice Mail DTMF Integration 371
Voice Mail, Centralized 259
Voice Message, Simplified (SVM) 324
VoIP → Voice over Internet Protocol Network 281
VPS Data Control by the PBX 369

W

Wake-up Call, Remote 341
Walking COS 380
Walking COS—DISA 89
Walking Extension 381
Walking Extension, Enhanced 382
Walking Station → Walking Extension 381
Whisper OHCA 383
Wireless XDP Parallel Mode 384
Wrap-up 156

X

XDP → EXtra Device Port 108
XDP, Digital 217
XDP, Wireless 384

Panasonic Corporation of North America
One Panasonic Way, Secaucus, New Jersey 07094

http://www.panasonic.com/bts

Copyright:
This material is copyrighted by Panasonic System Networks Co., Ltd., and may be reproduced for internal use only. All other reproduction, in whole or in part, is prohibited without the written consent of Panasonic System Networks Co., Ltd.

© Panasonic System Networks Co., Ltd. 2010

PSQX4746SA KK0908GJ7053